# TRANSPORTATION RULES

# OF

# GEORGIA PUBLIC SERVICE COMMISSION

**August 1, 2000**

COMMISSIONERS:

BOB DURDEN, CHAIRMAN
ROBERT B. BAKER, JR.
DAVID L. BURGESS
LAUREN "BUBBA" MCDONALD, Jr.
STAN WISE

DEBORAH K. FLANNAGAN
EXECUTIVE DIRECTOR

AL HATCHER, DIRECTOR
TRANSPORTATION DIVISION

# Georgia Public Service Commission

47 Trinity Avenue SW
Atlanta GA 30334-5701
(404) 656-4501 or 1 (800) 282-5813
fax: (404) 656-2341
www.psc.state.ga.us

**FILE MCA 1-3**

## REISSUANCE OF GEORGIA PUBLIC SERVICE COMMISSION TRANSPORTATION RULES

**BY THE COMMISSION:**

**Whereas,** the current Georgia Public Service Commission's Transportation Rules were issued March 1, 1989, and

**Whereas**, these rules have been amended from time to time since such issuance and the Commission has contemplated further amendments of said rules for the purpose of clarifying and updating same, and

**Whereas**, the matter of changes and reissuance of the Commission's Transportation Rules was assigned for public hearing before the Commission on July 25, 2000, and notice of such public hearing was distributed to all concerned, and

**Whereas**, no one appeared at the hearing in opposition to the proposed changes and reissue of said rules, and

**Whereas**, the Commission is authorized to reissue and update its rules relating to motor carrier and railroad operations in Georgia pursuant to authority vested to it in Georgia Code Section 46-7-27, it is, therefore,

**ORDERED:** That the Commission's Transportation Rules relating to motor carrier and railroad operations in Georgia issued March 1, 1989, and as amended, be, and the same are hereby reissued and further amended to become effective August 1, 2000.

BY ORDER OF THE GEORGIA PUBLIC SERVICE COMMISSION, this the 1st day of August, 2000.

The above was reduced to writing and signed by the Chairman and Executive Secretary this 10th day of August, 2000.

HELEN O'LEARY
EXECUTIVE SECRETARY

BOB DURDEN
CHAIRMAN

# TRANSPORTATION RULES OF THE GEORGIA PUBLIC SERVICE COMMISSION

**Table of Contents**


**HISTORICAL INFORMATION** ..... **III**

**CHAPTER 1: ORGANIZATION** ..... **1**

**CHAPTER 2: PRACTICE AND PROCEDURE** ..... **5**

**CHAPTER 3: GENERAL RULES** ..... **10**

**CHAPTER 4: SAFETY AND HAZARDOUS MATERIALS RULES AND REGULATIONS** ..... **18**

- **SUBCHAPTER 4-1: MOTOR CARRIER SAFETY** ..... **19**
- **SUBCHAPTER 4-2: HAZARDOUS MATERIALS SAFETY** ..... **42**
- **SUBCHAPTER 4-3: GEORGIA FOREST PRODUCTS TRUCKING RULES** ..... **54**
- **SUBCHAPTER 4-4: LIMOUSINE SAFETY RULES** ..... **76**
- **SUBCHAPTER 4-5: SAFETY OPERATIONS REVIEWS** ..... **89**

**CHAPTER 5: CERTIFICATED CARRIERS** ..... **90**

- **SUBCHAPTER 5-1: GENERAL PROVISIONS** ..... **91**
- **SUBCHAPTER 5-2: HOUSEHOLDS GOODS CARRIERS** ..... **98**
- **SUBCHAPTER 5-3: PASSENGER CARRIERS** ..... **103**
- **SUBCHAPTER 5-4: LIMOUSINE CARRIERS** ..... **106**
- **SUBCHAPTER 5-5: RATES AND TARIFFS** ..... **109**
- **SUBCHAPTER 5-6: REVENUE AND EXPENSE REPORTS** ..... **113**

**CHAPTER 6: PERMITTED CARRIERS** ..... **114**

**CHAPTER 7: MOTOR CARRIER INSURANCE** ..... **117**

**CHAPTER 8: MOTOR VEHICLES** ..... **122**

**CHAPTER 9: HAZARDOUS MATERIAL TRANSPORTATION REQUIRING SPECIAL PERMITS AND/OR LETTERS OF INTENT** ..... **127**

**CHAPTER 10: CIVIL PENALTIES** ..... **133**

**CHAPTER 11: RAILROAD COMPANIES** ..... **136**

## HISTORICAL CHRONOLOGICAL LIST OF ACTS OF THE GENERAL ASSEMBLY RELATING TO COMMISSION ACTIVITIES

### Historical Information

For the benefit of the practitioner desiring to examine the original Statutes, the various Acts are here briefly summarized in the order of their enactment:

The Georgia Public Service Commission is one of the oldest regulatory commissions in the United States, its creation antedating the Interstate Commerce Commission by eight years.

By Act No. 269, Part I, Title 12, of the Acts and Resolutions of the General Assembly of the State of Georgia in 1879 the Railroad Commission of Georgia was created. The original Commission consisted of three members appointed by the Governor. The term of office was fixed at six years, which term still prevails.

The original Act empowered the Railroad Commission with jurisdiction over railroad rates and charges, and to some extent a degree of authority over railroad service. That Act prohibited rebates or discrimination and its primary purpose was twofold, first, to prevent the charging and collecting by the railroad companies of excessive freight rates or passenger fares, and second, to prevent discrimination resulting from the generally prevailing practice of granting lower rates or concessions to the larger shippers.

The first order of the Georgia Railroad Commission establishing a scale of rates for railroad companies was issued early in the spring of 1880, becoming effective about May 1st of that year.

The original Act of 1879 required the Commission to give the railroads 30 days' notice of any proposed joint rates and also to hold hearing thereon, and required that the Commission prescribe the division of such joint rates between the involved carriers.

The Commission was given authority to investigate the books and accounts as well as authority to prescribe such rules as appeared necessary to properly govern the conduct of the carriers over which the Commission's jurisdiction extended. The Commission was also given authority to issue subpoenas and to require testimony.

The original Act of 1879 provided certain penalties for violations and generally speaking those penalties are still the applicable requirements of the statute.

By Act approved December 18, 1890, following the creation of the Interstate Commerce Commission in 1887, the Georgia Commission was specifically directed to present to the Interstate Commerce Commission any conditions involving interstate rates which the Commission felt would be of interest to, or have an effect upon, the citizens of the State of Georgia.

By Act approved August 31, 1891, the Act of 1879 was amended to permit the Railroad Commission of Georgia to prescribe the location and to require the construction of depots, either freight or passenger.

By Act approved October 16, 1891, the Act was further amended to authorize the Commission to institute suit for violation of its rules and thus invoke the penalties provided in the original statute.

An Act approved October 17, 1891, authorized the Commission to inspect railroad tracks and require that they be safely maintained, and a separate Act likewise approved October 17, 1891, extended the Commission's jurisdiction to cover the storage charges of the Railroad companies.

By Act approved October 21, 1891, the Commission's authority was extended to include the express companies and the telegraph companies. This was the first enlargement of its jurisdiction to include public utilities other than railroad companies.

By Act approved October 15, 1891, the Railroad Commission was empowered with authority to prevent unjust discrimination between the railroad companies themselves, that is to prohibit one railroad company from discriminating in favor of another railroad company in connection with its terminal usage or in any other manner. By Act approved October 16, 1891, the railroad companies were required to trace shipments of freight under certain conditions. Accordingly, the year 1891 witnessed a considerable broadening and strengthening of the regulatory powers of the Commission.

The jurisdiction of the Commission continued under the statutes outlined until 1905, when by Act approved August 23, 1905, the Commission was empowered to require the carriers to promptly receive and deliver freight. This Act was the result of agitation with respect to so-called reciprocal demurrage. At that time the rail carriers were not affording the prompt and adequate service which is common today, and this Act was designed to secure for the public more adequate and efficient service.

By Act approved August 21, 1906, following the historical Hoke Smith-Joe Brown incident, the Legislature amended the original 1879 Act to provide that the three Railroad Commissioners should be selected by the voters of the State.

By Act approved August 22, 1907, the composition of the Commission and its powers were further changed. This Act of 1907 provided that the Commission should consist of five members instead of three, to be elected by the qualified voters of Georgia as provided in the 1906 Act. The statute further extended the jurisdiction of the Commission to street railroads and street railroad companies; docks and wharves; terminal and terminal stations; cotton compresses; telegraph and telephone corporations or companies; gas; electric light and power companies.

This Act further broadened the powers of the Commission so as to give it authority to require, in some cases, an extension of the physical properties of the companies over which it

exercised jurisdiction and also extended to the Railroad Commission jurisdiction over the issuance of stocks and bonds by the companies subject to its jurisdiction.

Basically the Commission today operates so far as railroads and utilities are concerned, under the statutes heretofore described.

The Commission continued under those basic statutes until 1922 when by Act approved August 21, 1922, the name of the Railroad Commission was changed to the Public Service Commission, and under that statute the utilities then regulated by the Commission were required to pay a fixed fee at $70,000 per annum, to be divided among the various utilities subject to regulation in proportion to their total taxable values. Prior to the passage of the 1922 Act, the expenses of the Railroad Commission were borne from the general treasury.

By Act approved August 26, 1925, which amended an Act approved August 13, 1924, the jurisdiction of the Commission was extended to include motor-busses and trackless trolleys operated by all electric street, suburban or interurban railroad companies then or thereafter incorporated under the laws of this State.

By Act approved February 22, 1939, Section 19-205 of the Georgia Code of 1933, providing for suspension of any Commissioner from office by order of the Governor, was repealed.

By Act approved March 20, 1943, the Legislature submitted to the voters of the State a Constitutional Amendment under which, following its ratification at the 1943 General Election, the Commission became a Constitutional body.

Jurisdiction over For Hire Motor Carriers was first placed in the Public Service Commission by Act approved August 29, 1929, which Act, however, was subject to litigation and to all intents and purposes was found to be unconstitutional by decision of the Supreme Court of Georgia. Following this, the Legislature, which was in session at the time the Supreme Court issued its decision, by Act approved March 31, 1931, enacted a new law governing motor carriers for hire, and which statute including both the common carriers and the private or contract carriers, and placing this new form of transportation under the jurisdiction of the Public Service Commission. By separate Act, approved March 31, 1931, the load, height, width and speed of for hire motor vehicles was prescribed and the Commission given certain powers with respect to govern motor common carriers for hire differing in some respects from the Act approved March 31, 1931, but which later act remained in effect as to the private or contract motor carriers for hire.

By Act approved March 21, 1933, the Contract Carriers Act of 1931 was amended to exempt from regulation rural mail carriers hauling not more than five passengers between points upon their route and by Act approved March 11, 1937, the Motor Carrier Acts were amended to permit suits to be instituted jointly against insurance companies and motor carriers covered by such insurance. By Act approved March 29, 1939, the Private or Contract Carrier Act was amended to increase from 10,000 to 18,850 pounds the amount which could be hauled to or from

farms by certain exempted operations. This Act was further amended in 1943 by including peanuts in the shell and peaches as exempted commodities.

By Act approved at the 1937-38 session of the General Assembly, as amended in 1947, the Commission is authorized to consummate reciprocal agreements with other states as to fees and license of motor vehicles operated by common and contract carriers.

By Act approved March 27, 1941, the motor carrier laws were amended as to size and weight of motor vehicles, including cargo.

An Act approved March 9, 1945, provided that if any party of record in a matter decided by the Commission in a formal proceeding be dissatisfied with the order or decision of the Commission, applicant may, within ten days from notice thereof by written petition to the Commission, make request for rehearing, reconsideration and oral argument.

By Act approved February 15, 1950, Code Section 68-609 applicable to motor carriers was amended prohibiting the Commission from granting a motor carrier certificate of public convenience and necessity over a route already served until the existing certificate holder has been given reasonable time to remedy any existing inadequacy in service.

By Act approved March 7, 1957, (Code Chapter 78-12) the position of Public Service Commissioner Emeritus was created. Only members of the Commission who have attained the age of 65 years, and who have been in continuous service for more than 20 years, and who shall advise the Governor in writing that he desires to resign from the position of Public Service Commissioner, are eligible for appointment as Commissioner Emeritus. The salary shall be two-thirds that of a Commissioner.

The Act approved March 25, 1958, Code Section 68-602(b) was amended so that said Chapter will apply to trucks operating under the jurisdiction of a municipality on any operation outside the corporate limits of such municipality

By Act approved March 17, 1960, the Commission was given police powers and authority to delegate to employees the authority to enforce the Motor Carrier Acts and to arrest persons found in violation thereof.

By Act approved March 17, 1960, Code Section 93-208 was amended so as to provide a salary of $16,000.00 per annum for each member of the Commission.

An Act approved March 17, 1960, amended Code Section 68-502(c)(2a) by inserting the words “or dry fertilizer” after the words “peanuts in the shell and peaches.”

An Act approved February 28, 1962, amended Code Section 68-502(c)(2a) by exempting certain fresh vegetables from Commission jurisdiction.

An Act approved March 6, 1962, defined the words “for hire” in Code Section 68-601(g).

An Act approved February 26, 1963, exempted dump trucks and transit mixer vehicles in the transportation of sand, gravel, plant mix road materials, etc., from Commission jurisdiction, when operating 50 miles or less.

An Act approved April 9, 1963, prohibited operations of drays and trucks beyond the city limits of a municipality without a certificate of public convenience and necessity.

An Act approved April 9, 1963, provided that rates of contract carriers shall be only those prescribed by the Commission.

An Act approved April 9, 1963, required non-resident motor contract carriers to designate an agent for service with the Commission, and failing therein, providing that the Secretary of State shall accept service of process.

An Act approved April 9, 1963, provided for "For-Hire" carriers operating solely in interstate commerce to register with the Commission irrespective of exemptions.

An Act approved April 9, 1963, required non-resident motor common carriers to designate an agent for service with the Commission, and failing therein, providing that the Secretary of State shall accept service process.

An Act approved March 10, 1964, vehicles known as tow vehicles used in pulling wrecked or disabled motor vehicles were exempted from the jurisdiction of the Commission.

An Act approved February 17, 1964, the size and weight law was amended increasing the maximum weight to 73,280 lbs. and by increasing the maximum length of single vehicles or combinations of vehicles to 55 feet.

By Acts approved March 26, 1968, Code Sections 68-525 and 68-633 were amended relative to qualifications required by motor carriers operating solely in interstate commerce

By Act approved in 1970, Code Section 68-502 was amended to add the words "of poultry and processed poultry" to subsection (c)(2a).

By Act approved March 8, 1972, Code Section 93-307.1 was adopted permitting the utilities regulated by the Commission in Code Section 93-307 to change their rates and services within 30 days unless suspended by the Commission for not more than five months, the changes to become effective under bond at the end of the suspension until decided by the Commission.

An Act approved in 1973, Code Section 68-525 Registration of Routes and Vehicles by Motor Carrier; Bond or Indemnity Insurance; interstate commerce, amended to rewrite subsection (a)(2).

By Act approved in 1973, Code Section 68-623 Annual Registration by Motor Common Carriers; License Taxes Prohibited; Fees was amended to entirely supersede the former section.

By Act approved in 1973, Code Section 68-633 Registration of Routes, Vehicles, etc. by Common Carriers; Indemnity Insurance; Interstate Commerce amended to supersede former subsection (b).

By Act approved in 1973, Code Section 68-611.1 Temporary Emergency Authority procedure was created.

By Act approved in 1975, Code Section 68-502 was amended to add the words "nursery stock, sod grass, potting soil and pine bark nuggets" to subsection (c)(2a).

By Act approved in 1975, Code Section 68-628 Hours of Duty for Drivers Limited; repealed.

By Act approved in 1975, Code Section 68-522 pertaining to hours of duty for drivers repealed.

By Act approved in 1975, Code Sections 68-704, Trailers; Code Section 68-705 Mirror required; and Code Section 68-706 Device for Regulating Speed and Physical Examination for Drivers; repealed.

By Act approved in 1976, Code Section 68-502 was amended to raise the exemption provided for in 68-502(c) (1) from seven to nine passengers.

By Act approved April 12, 1979, Code Section 68-502 was amended to exempt from Commission jurisdiction motor vehicles with a capacity of 15 persons or less operated not for profit when transporting elderly and handicapped passengers or employees under a corporate sponsored van pool program.

By Act approved April 16, 1979, Code Section 93-508 was revised to provide that the Commission, its employees and agents may take depositions and obtain discovery.

By Act approved March 20, 1980, Code Chapter 68-6 was amended to provide for emergency registration of vehicles and payment of fees by motor common carriers.

By Act approved March 25, 1980, Code Chapter 68-5 was amended to provide for emergency registration of vehicles and payment of fees by motor contract carriers.

By Act approved March 25, 1980, Code Section 68-510 was amended to provide for joint rate-making (collective rate-making) and other procedures and for compliance therewith.

By Act approved March 20, 1980, Code Chapters 68-5 and 68-6 were amended to provide for and require the collection of certain application fees; to authorize the Commission to delegate its authority under certain circumstances.

By Act approved March 2, 1981, Code Title 93 was amended to provide for Commission hearing officers.

By Act approved March 16, 1981, Code Chapter 93-3 was amended to transfer certain functions, powers and duties and authority from the Department of Public Safety to the Commission; to repeal a certain section of the "Executive Reorganization Act of 1972."

By Act approved March 11, 1982, Code Section 46-1-1 was amended to exempt motor vehicles in the transportation of corn, soybeans, soybean meal and feed for poultry or livestock from Commission jurisdiction.

By Act approved April 13, 1982, Code Section 46-1-1 was amended to reinstate provisions omitted from Title 46 which provided exemption of motor vehicles transporting elderly and handicapped passengers and employees under a corporate van pool program.

By Act approved March 15, 1983, Code Section 46-7-18 and 46-7-63 were amended to provide that the Commission shall establish a collective rate-making procedure for all motor carrier transportation.

By Act approved March 15, 1983, Code Section 46-7-13 was amended extending temporary emergency authority until finalization of application for corresponding permanent authority.

By Act approved March 16, 1983, Code Section 46-1-1 was amended, Code Title 46, Chapter 7 Enacted, to define the term "private carrier" and to provide for motor vehicle safety inspections upon request of certain motor common carriers, motor contract carriers and private carriers; to provide for procedures, fees and decals.

By Act approved March 21, 1984, Code Section 46-9-2 was amended to authorize certain motor common carriers to limit their liability through certain procedures; Code Section 46-9-191 was amended to provide that a carrier may acquire a lien (other than consumer goods) for freight charges and may retain possession of other goods belonging to the debtor which come into the possession of the carrier until the lien is paid.

By Act approved March 27, 1985, Code Title 46, Chapter 11, jurisdiction over transportation of hazardous materials was transferred from Department of Transportation to the Commission.

By Act approved April 4, 1984, Code Title 46, Chapters 1 and 7 were amended to change the definition of "private carrier," to authorize vehicle safety requirements for private carriers, to provide certain exceptions, to provide injunctions under conditions.

By Act approved April 4, 1985, Code Section 46-7-29 and 46-7-71 were amended to provide that appeal of a final decision of an employee of the Commission shall be considered by the Commission itself.

By Act approved April 10, 1985, Code Section 46-1-1 amended to provide that motor vehicles transporting hazardous materials in private carriage be subject to certain safety regulations promulgated by the Commission.

By Act approved April 9, 1986, Code Section 46-1-1 was amended and Code Title 46, Chapter 7 was revised, which provided for Commission regulatory reform of motor carrier regulation.

By Act approved April 11, 1986, Code Section 46-2-28 was revised to exempt motor common and contract carriers from provisions of this Code Section.

By Act approved April 14, 1987, Code Section 46-1-1 was amended to exempt dump trucks and transit mixer vehicles transporting sand, gravel, plant mix concrete, etc. from Commission economic regulation jurisdiction, except requirement for registration of exempt operation; registration and identification of vehicles; insurance filings; identification of vehicles, and becoming subject to safety regulations.

By Act approved July 1, 1988, Code Section 47-17-1 was amended to provide that certain employees of the Public Service Commission shall be entitled to membership in the Peace Officers' Annuity and Benefit Fund.

By Act approved July 1, 1988, Code Sections 46-7-15, 46-7-16, 46-7-60 and 46-7-61 were amended to change provisions relating to registration, licensing and certain other requirements for motor common carriers and motor contract carriers operating under certificates or permits; engaged in exempt commodities; intrastate commerce; or engaged solely in interstate commerce.

By Act approved April 4, 1990, Code Section 46-1-1 was amended to provide for adoption and promulgation of the Georgia Forest Products Trucking Rules; to provide for the motor vehicles to which such rules shall be applicable.

By Act approved April 9, 1993, Code Section 46-1-1 was amended to exclude ambulances from the definition "motor common or motor contract carrier;" to require reflectors on certain pulpwood and pole trailers.

By Act approved April 14, 1994, Chapter 7 of Title 46 was amended by redesignating current Articles 3 and 4 as Articles 4 and 5, respectively, and adding a new Article 3 which provides the Commission jurisdiction over limousines; requires limousines to obtain certificates, requires annual inspections; requires chauffeur permits and criminal background investigations of all chauffeurs.

By Act approved May 1, 1994, Code Section 46-1-1 (7) (xiii), was amended to change the definition of exempt vehicles by substituting "Vehicles, except limousines, transporting not more than ten persons for hire" for "Vehicles transporting not more than 15 persons for hire."

By Act approved April 15, 1996, under Title 46, Code Section 46-7-1 Article 2,(46-7-50 through 46-7-79) (Motor Contract Carriers) was repealed and Article 1 was amended to read "Motor Common or Contract Carriers." Title 46, Chapter 7 was amended due to Congress passing the Federal Aviation Administration Act which became effective January 1, 1995 effectively deregulating intrastate "for hire" carriers (except household goods and passengers) relating to price, route(s) of service. Provides a provision for Motor Carrier of Property Permit(s). This Legislation brings Georgia code into conformity with the Federal Act and also provided compliance with congressional Mandate passed in 1991 that became effective January 1, 1994.

By Act approved April 27, 2000, under Title 46, Code Section 46-7-26 was amended to provide for the utilization of surge brakes on certain vehicles - effective date July 1, 2000.

# TRANSPORTATION RULES
# OF
# GEORGIA PUBLIC SERVICE COMMISSION

## CHAPTER 1: ORGANIZATION

### Table Of Contents


**1-1.1 Organization**
**1-1.2 Chairman**
**1-1.3 Vice-Chairman**
**1-1.4 Executive Director**
**1-1.5 Executive Secretary**
**1-1.7 Official Reporter**
**1-1.9 Fiscal and Budget Officer**
**1-1.11 Personnel Officer**
**1-1.13 Administrative Hearing Officers**

**1-2.1 Director, Utilities Financial Analysis**
**1-2.3 Director, Utilities Engineering**

**1-3.1 Director, Transportation Division**
**1-3.3 Transportation Enforcement Personnel**


### 1-1.1 Organization.

The domicile of the Georgia Public Service Commission is fixed by law at the Capitol. The General Offices of the Commission are located at 244 Washington Street, S.W., Atlanta, Georgia 30334 (See Note). Public hearings are generally held in the Commission's hearing room in its offices at the above address, although it is authorized to hold hearings in different parts of the State when it is deemed necessary to best serve the interest and convenience of the public. All evidence presented at public hearings is recorded by the official reporter of the Commission. The time and place of administrative sessions of the Commission are provided for by Commission Rule. All hearings and all administrative sessions are open to the public. Minutes of all decisions of the Commission are taken down by the Secretary of the Commission. A majority of the Commission is required to transact business or render official decisions. All records of the Commission are open to public inspection. The Commission's legal representative is the Attorney General of Georgia.

**NOTE:** While the Commission's General Offices at 244 Washington Street are under renovation, the temporary offices of the Commission are located at 47 Trinity Avenue, S.W., Atlanta, Georgia 30334.

### 1-1.2 Chairman.

(a) It shall be the duty of the Chairman to preside at all meetings of the Commission; to preserve strict order; to procure at all times the correct meaning and sense of the Commission; to conduct the business of the Commission when in Administrative Session subject to the direction of a majority of the Commission.

(b) The Chairman shall be the Chief Executive Officer of the Commission; shall conduct its correspondence; attend to the office of the Commission as required by law; see that all orders and rules of the Commission are duly carried into effect, and that all officers and employees perform their duties as required by said orders and rules as required by law.

(c) The Chairman is authorized to issue, at any time orders setting down causes or pending matters for a hearing; to issue in the name of the Commission process and notice to persons or corporations to be affected by proceedings before the Commission; to issue orders requiring the production of books, writings, and documents to be used upon hearings, investigations, or business before the Commission; to issue any and all such other orders of an

interlocutory character as may be necessary or proper for preparing and expediting hearings before the Commission. The provisions of this subsection do not limit the powers of the Commission or those of any Hearing Officer or any Representative of the Commission as provided by law.

(d) The Chairman will report to the Commission as to what has been done during intervals between meetings, and also any new matters or questions with his recommendations relating thereto, but reserving for action of the body all new matters and cases.

(e) The Chairman shall appoint four standing committees which shall be composed of three commissioners, one of which shall be the Chairman of the committee. Committee members may be reassigned during their appointed term upon the recommendation of the Commission Chairman and approval of the Commission. The standing committees shall be The Committee on Transportation Matters, The Committee on Communication Matters, The Committee on Energy Matters and the Committee on Policy Development and Intergovernmental Affairs.

**1-1.3 Vice-Chairman.**

There shall be a Vice-Chairman who shall be appointed by the Chairman to serve at his pleasure. The Vice-Chairman shall act in the absence or inability of the Chairman.

**1-1.4 Executive Director.**

Subject to the direction of the Commission, the Executive Director acts as Chief Staff Officer of the Georgia Public Service Commission with responsibility for direction and coordination of the activities of the Commission's staff in accordance with the policies established by the Commission for the regulation of those industries under its jurisdiction; directs all administrative support functions required for effective operation of Utilities and Transportation Divisions; and is in charge of all Commission personnel and preparation of the budget of the Commission.

**(a) Assistant to the Executive Director.** The Assistant to the Executive Director assists the Executive Director (PSC) in the direction and coordination of the staff of the Public Service Commission; supervises the Administrative Division; represents the Executive Director in liaison with Division Directors of the agency and with other agencies; assists the Executive Director in preparation of the Commission budget, and the supervision of Commission personnel.

**1-1.5 Executive Secretary.**

Subject to the direction of the Commission, the Executive Secretary acts as Secretary of the Commission with responsibility for recording all appearances at public hearings of the Commission; maintaining all books, files and records of the Commission; provides on-the-spot legal aide and counsel, maintaining all books, files and records of the Commission; prepares, or reviews and co-signs with Chairman all Commission orders and vouchers of the Commission; legal responsibility for recording all Commission decisions in the Official Book of Minutes; certifying to copies of Commission documents and records; handling administrative details of office management; including routing of Commission correspondence to proper department heads and individual Commissioners; receives and routes to all department heads applications, petitions and complaints for disposition as directed by the Chairman of the Commission; is responsible for maintaining mailing lists and publications of all matters assigned for public hearing before the Commission under direction of the Chairman or the Commission.

(a) There shall be an Assistant to the Executive Secretary of the Commission who shall act in the absence or inability of the Executive Secretary.

**1-1.7 Official Reporter.**

The Official Reporter and such assistants as may be appointed by the Commission shall record and keep a complete record of all proceedings and evidence of matters heard before the Commission in public hearings, and have transcribed copies thereof available for the Commission and parties of record when requested.

**1-1.9 Fiscal and Budget Officer.**

Subject to the direction of the Commission, the Fiscal and Budget Officer supervises the fiscal affairs of the Commission. He prepares the projection and supervises the preparation of budgets, payrolls and payroll reports to various other State agencies; performs the duties of records management officer and supervises and approves the purchase of materials and supplies for the agency.

**1-1.11 Personnel Officer.**

Subject to the direction of the Commission, the Personnel Officer supervises the personnel affairs of the Commission. These duties are performed in accordance with the laws and regulations of the State Merit System.

**1-1.13 Administrative Hearing Officers.**

The Administrative Hearing Officer(s) shall be authorized to conduct hearings and perform the following functions in conjunction therewith: administer oaths and affirmations, sign and issue subpoenas; rule upon offers of proof; regulate the course of the hearing, set the time and place for continued hearings, and fix the time for filing briefs; dispose of motions to dismiss for lack of agency jurisdiction over the subject matter or parties or for any other grounds; dispose of motions to amend or to intervene; provide for the taking of testimony by deposition or interrogatory; and reprimand or exclude from the hearing any person for any indecorous or improper conduct committed in the presence of the agency or the hearing officer. The final decision of the hearing officer may be appealed to the full Commission as set forth in §46-7-29.

**1-2.1 Director, Utilities Financial Analysis.**

Subject to direction of the Commission, the Director, Utilities Financial Analysis, directs the work of the Utilities Financial Analysis Division in the analysis of accounting, spending, and financing methods employed by regulated utility companies. Duties are performed under the administrative direction of the Executive Director.

**1-2.3 Director, Utilities Engineering.**

Subject to the direction of the Commission, the Director, Utilities Engineering, acts as chief officer of Utilities Engineering Division responsible for the planning, direction, and supervision of all Commission engineering functions related to the regulated utilities, including review and analyses of physical plants, depreciation schedules, energy distribution and public communication facilities, safety of natural gas distribution lines, operational boundaries of electric and telephone companies, and the handling of all consumer complaints related to

operations, services and rates of regulated utilities. The duties are performed under the administrative direction of the Executive Director.

**1-3.1 Director, Transportation Division.**

Subject to the direction of the Commission, the Director, Transportation Division, acts as chief officer of the Transportation Division responsible for the planning, direction and supervision of all Commission transportation functions, including furnishing the Commission expert information and advice on all matters brought before it involving motor carrier registration, safety, hazardous materials, rates and service matters, and to attend for those purposes hearings where such matters are involved; also responsible for enforcement of Commission's Rules and Regulations and Laws of Georgia relating to both for hire and private carriers. The duties are performed under the administrative direction of the Executive Director.

**1-3.3 Transportation Enforcement Personnel.**

Personnel of the Commission which have been designated, deputized and delegated police powers as provided for in O.C.G.A. §46-7-28 and §46-11-6 have the authority to:

(a) Stop and inspect all motor vehicles using the public highways for the purposes of determining if said vehicles are complying with the laws, rules, or regulations of the Commission or other laws regulating the use of the public highways by motor vehicles;

(b) Enter upon any property where motor vehicles subject to the Commission's jurisdiction are housed, kept or maintained for the purpose of inspecting or examining such vehicles in order to determine if such are complying with the laws of the state and rules or regulations of the Commission;

(c) Enter upon property where carrier records, including but not limited to, driver qualification and training documents, driver's licenses, records of duty status, hours of service records, inspection reports, shipping documents, leases, permits, vehicle registrations, insurance documents, and any supporting documents thereto, are kept or stored for the purpose of examining such documents to determine whether persons subject to the Commission's jurisdiction have complied and are complying with the laws of the state and rules or regulations of the Commission;

(d) Examine vehicles, including but not limited to, cargo and compartments where cargo or equipment and supplies may be carried, driver's compartments, sleeper berths, and baggage compartments;

(e) Examine documents normally carried on board such vehicles, including but not limited to, driver qualification and training documents, drivers' licenses, records of duty status, hours of service records, inspection reports, shipping documents, leases, permits, vehicle registrations, insurance documents, and any supporting documents thereto;

(f) Take other actions as necessary, and within the limits of applicable law, to carry out the duties of the Commission with respect to persons under its jurisdiction.

# TRANSPORTATION RULES
# OF
# GEORGIA PUBLIC SERVICE COMMISSION

## CHAPTER 2: PRACTICE AND PROCEDURE

### Table Of Contents


**2-1.1 Opinions of Commissioners**
**2-1.2 Administrative Sessions**
**2-1.3 Publication of Commission Decisions**
**2-1.4 Applications and Petitions**
**2-1.5 Complaints**
**2-1.6 Public Hearings**
**2-1.7 Parties of Record**
**2-1.8 Rehearing, Reconsideration, and Oral Argument**
**2-1.9 Consumer's Utility Counsel**

**2-2.1 Promulgation, Amendment or Repeal of Rules**
**2-2.2 Suspension of Rules**
**2-2.3 Failure to Observe Rules**

**2-3.1 Suspend, Revoke, Alter or Amend Certificate or Permit**

**2-4.1 Inspections by Commission's Representatives**


### 2-1.1 Opinions of Commissioners.

Every member of the Commission will, in all cases, reserve his opinion and in no way commit himself in advance touching the merits of any matter or question to be passed upon by the Commission, or that should be dealt with by it, until the facts and evidence are all submitted and the Commission considers the same in administrative session. In all matters which relate to the making of rates and which may become the subject of litigation, no member shall make any statement after such matter has been decided by the Commission which may be or is liable to be treated as an admission prejudiced to the action of the Commission. In all cases, and on all questions, any member may file his dissenting opinion when in the minority, or his reasons and grounds for his opinion when in the majority.

### 2-1.2 Administrative Sessions.

Administrative Session meetings shall be held on the first and third Tuesday of each month at ten o'clock a.m., in the offices of the Commission in the State Offices Building, 244 Washington Street, S.W., at Atlanta, Georgia, (See Note) when a quorum is present, unless postponed by the Chairman, and there shall be such adjourned meetings as may be called, or postponed by the Chairman on his own motion, or on request of any two members. Such meetings shall be open to the public as provided by law. A majority of the Commission shall constitute a quorum for the transaction of business.

**NOTE:** While the Commission's General Offices at 244 Washington Street are under renovation, the temporary offices of the Commission are located at 47 Trinity Avenue, S.W., Atlanta, Georgia 30334.

### 2-1.3 Publication of Commission Decisions.

Any action taken by the Commission under the provisions of O.C.G.A. §46-2-25 shall be reduced to writing by the Commission and signed by the Chairman and Secretary thereof or by the Commission's designee. All such actions and orders shall be effective from the date such actions are reduced to writing and are signed as herein provided. No such action or order of the Commission may be given retroactive effect. A full and complete record shall be kept of the votes taken in connection with any such action, said record to be spread upon the official minutes

of the Commission. When any matter is published by a member or officer or Division Director of the Commission, the same is his individual act or declaration, and not the act of the Commission.

**2-1.4 Applications and Petitions.**

(a) All applications and petitions for Interim Certificates of Public Convenience & Necessity will be filed in such form as prescribed by the Commission. All applications must be accompanied by a current financial statement and an affidavit executed by an officer of the applicant corporation (if a corporation), applicant's owner (if a proprietorship), or a partner (if applicant is a partnership), containing information describing the number and types of vehicles being used and description of the area proposed to be serviced.

(b) In proceedings involving applications for Interim Certificates of Public Convenience & Necessity, thirty (30) day's notice will be given. Publication of notice of assignment of hearing in the Fulton County Daily Report and posting a copy of the Transportation Division notice of assignment of hearing on the Commission's website at http://www.psc.state.ga.us will constitute notice.

(c) After notice has been posted for a period of ten (10) days if no protests have been received, the Commission will place application on the next Transportation Committee Agenda for consideration. If the Commission finds that application is in order at the Transportation Committee meeting, the application will be placed on the Administrative Session Agenda for approval to issue a twelve (12) month interim certificate.

(d) If application is protested, the respective parties must present oral testimony at the scheduled hearing. Copies of the application and supporting documents must be served upon the opposite party, his counsel or agent having control of the case not less than 5 days prior to the date matter has been assigned for hearing.

(e) Any motor carrier or motor carrier representative desiring to appear before the Commission at public hearing in opposition to an application seeking an interim certificate or amendment to existing certificate, need not file a formal petition for such appearance, but may become a party protestant at the public hearing provided he has notified the applicant and the Commission of his intention to appear at the hearing to protest the application. Such notification and request shall be made by letter or fax so as to reach applicant and the Commission at least fifteen (15) days prior to the assigned hearing date. No person who fails to so notify the applicant and the Commission as provided for above will be permitted to intervene in such a proceeding before the Commission except upon a showing of substantial reasons submitted in writing to the Commission prior to the hearing. Nothing in this rule shall be construed to deny any member of the general public the right to appear at public hearing to protest such application, and the Commission reserves the right, in its discretion, to waive the provisions of this portion of the rule.

(f) After applicant and protestant have presented all evidence and testimony at the public hearing, the Commission will take the matter under advisement and render a decision accordingly in the matter. If the Commission issues a favorable decision, a twelve (12) month interim certificate will be issued.

(g) Prior to the end of the twelve (12) month period, the Commission staff will review the carrier's records to determine the actual area being served and whether any complaints have been received. At that time the findings would be brought before the Commission for approval or denial of permanent certificate.

**2-1.5 Complaints.**

All complaints made to the Georgia Public Service Commission involving motor carriers must plainly and distinctly state the grounds thereof, all being set forth in writing. In like manner, all defenses must be made in writing and must plainly and distinctly state the grounds thereof. The complaint must be accompanied by supporting documentation such as invoice, bill of lading and/or claim forms. The Commission is not empowered to adjudicate disputed claims. If the involved parties reach an impasse, the parties would have to be referred to the appropriate court of competent jurisdiction for further resolution.

**2-1.6 Public Hearings.**

Unless otherwise directed by the Commission, all applications, petitions or complaints, filed with the Commission, or actions initiated by the Commission prior to the second Friday of the month, shall be assigned for hearing on the fourth Tuesday of the following month or on any other date designated by the Commission.

**2-1.7 Parties of Record.**

(a) At the hearing on all protested applications, petitions and complaints, the Chairman of the Commission or the Commission's designee shall call for and enter the names of all parties desiring to become a party of record, either for or against the docketed case being heard. In the discretion of the Commission, parties having made written intervention prior to the hearing may be entered as a party of record.

(b) The Commission may, in its discretion and for good cause shown, authorize the late filing, or entering, of a notice of intervention.

(c) The Commission may, in its discretion, permit any person to present a statement of his position and views in sworn form, but such person shall not be entitled to receive copies of notices, motions, orders or other pleadings and documents, filed or issued in the proceeding, unless otherwise directed by the Commission on good cause shown.

**2-1.8 Rehearing, Reconsideration and Oral Argument.**

If any party of record in a matter decided by the Commission in a formal proceeding or by modified procedure be dissatisfied with the order or decision of the Commission, application shall be made within ten days from receipt of the final decision thereof by written petition, to the Commission for rehearing, reconsideration and oral argument, alleging with particularity the matters claimed to have been erroneously decided and the alleged errors and the relief sought, together with a certificate that a copy of such petition has been furnished all parties of record. If, in the opinion of the Commission, good cause has been alleged in said petition for rehearing, reconsideration and oral argument, the Commission shall, within thirty days, either assign such petition for hearing or conference, or reopen the original hearing for introduction of additional evidence and give all parties of record not less than ten days' notice thereof. Such petition shall serve as a supersedeas, and pending final order of the disposition thereof, the original order shall be stayed unless the Commission otherwise orders.

**2-1.9 Consumers' Utility Counsel.**

In addition to other requirements of service and notice now imposed by law, a copy of any application, correspondence, complaint, pleading, paper or notice to or issued by the Georgia Public Service Commission shall also be served on the Consumers' Utility Counsel. The Commission shall not proceed to hear or determine any petition, complaint, or proceeding in which the Consumers' Utility Counsel is entitled to appear unless it shall affirmatively appear that the Consumers' Utility Counsel was given at least 10 days' written notice thereof. Such notice must be affirmatively waived in writing. The Consumers' Utility Counsel may appear and specifically waive such notice. Once the Commission has begun to hear or determine any such petition, complaint or proceeding of which prior notice was given or waived, the Commission shall thereafter issue such orders and take such action relating thereto as it may deem appropriate, and upon such notice to parties as it may deem appropriate. Whenever service of notice is perfected by mail, four days shall be added to the prescribed period. Proof of service of notice may be made by certificate or other proof satisfactory to the Commission, and shall create a rebuttable presumption of service.

**2-2.1 Promulgation, Amendment, or Repeal of Rules.**

Promulgation, amendment, or repeal of all rules adopted by the Commission in these chapters may be proposed, adopted and published by approval of a majority of the Commission as prescribed by law.

**2-2.2 Suspension of Rules.**

The Commission may, at its discretion, suspend or modify the enforcement of any of its rules, rates, fares, charges, orders or other regulations where, in its opinion, the conditions are such, in any particular instance, that a strict enforcement of such rules, rates, fares, charges, orders or other regulations would not be in the public interest.

**2-2.3 Failure to Observe Rules.**

Failure of any carrier subject to the jurisdiction of the Commission to comply with the Rules of the Commission, or any amendment thereto, shall be cause for suspension, revocation of a certificate, permit, or registration receipt, and/ or assessment of civil or criminal penalty.

**2-3.1 Suspend, Revoke, Alter or Amend Certificate or Permit.**

(a) The Commission may at any time, after notice and opportunity to be heard, suspend, revoke, alter or amend any certificate or permit, if it shall be made to appear that the holder has willfully violated or refused to observe orders, rules, or regulations prescribed by the Commission or provisions of the Motor Carrier Acts, or any other law of this State regulating or taxing motor vehicles, for hire, and applicable to the holder of such certificate, or if, in the opinion of the Commission, the motor carrier is unfit, or not furnishing adequate service, or it is no longer compatible with the public interest to continue said certificate or permit in force or the continuance of said certificate or permit is not in conformity with the spirit and purpose of the law.

(b) It shall be unlawful for a carrier to conduct any operations after their authority has been canceled or during a period in which the certificate or permit is in suspension.

**2-4.1 Inspections by Commission's Representatives.**

Commissioners or representatives of the Commission authorized to make inspections and to enforce these rules and regulations will be provided with a card of identification signed by the Chairman and duly attested by the Executive Director of the Commission. If in the course of carrying out their duties, a representative of the Commission is asked for identification, the representative shall display the identification card issued hereunder to such person making the request.

Such representatives shall have the right at any time to enter into or upon any motor vehicle being operated under the Motor Carrier Acts and to which these rules apply for the purpose of ascertaining whether or not the carrier is complying with the provisions of the law and the rules of the Commission.

Willful refusal of any motor carrier or operator thereof to stop or discontinue the use of any such motor vehicle until properly conditioned, when ordered to do so by the Commission or its representative or to permit such representative to enter into or upon the same for the purpose aforesaid, shall be sufficient grounds for suspension and/or revocation of the Certificate, Permit or Registration Receipt under which said carrier is operating as well as subjecting said carrier or persons to civil and/or criminal penalties provided for by law.

Representatives shall report all irregularities under this rule to the Commission. The Commission's jurisdiction under this rule is extended to include motor carrier stations, garages, offices, vehicles, and all records kept or required to be kept.

# TRANSPORTATION RULES
# OF
# GEORGIA PUBLIC SERVICE COMMISSION

## CHAPTER 3: GENERAL RULES

### Table Of Contents

**3-1.1 Jurisdiction of the Commission**
**3-1.3 Application of Rules**
**3-1.5 Definitions**

**3-2.1 Operations Conducted in Certificate or Permit Name**
**3-2.3 Cancellation Due to Fraud**
**3-2.5 Designation of Process Agent**

**3-3.1 Civil Penalties - General**
**3-3.3 Criminal Penalties - General**

### 3-1.1 Jurisdiction of the Commission.

Unless otherwise specifically exempted by law, the Georgia Public Service Commission has jurisdiction over all motor common and motor contract carriers, limousine carriers, railroads or railroad corporations, express companies or corporations, terminals or terminal corporations. Also, the Commission has jurisdiction over all for hire and private motor carriers and forest products carriers relative to the safe transportation of hazardous materials, and the safe operation of vehicles and their drivers. (For Utility Agency jurisdiction, see Georgia Public Service Commission Utility Rule Book)

### 3-1.3 Application of Rules.

The rules herein promulgated state the conditions and regulations under which carriers are permitted to operate over the highways of this State.

### 3-1.5 Definitions.

Unless specifically defined elsewhere, when used in this rulebook, the term—

*Carrier* means:

(a) For the purposes of safety and/or hazardous materials regulation, any person who owns, controls, or manages a motor vehicle subject to the jurisdiction of the Commission, including, but not limited to, for hire motor common carriers, for hire motor contract carriers, forest products carriers, limousine carriers, private carriers, and any other person subject to the Commission's safety and hazardous materials jurisdiction (ref. O.C.G.A. §46-1-1, §46-7-37, §46-7-85.1, §46-11-3); or

(b) For the purposes of insurance filing, obtaining of certificates, obtaining of permits or vehicle registrations, any person who operates a motor vehicle to transport persons or property, or both, for compensation. (ref. O.C.G.A. §46-1-1)

*Carrier Class* means the classification or type of certificate, permit, or registration issued to a for hire carrier pursuant to the provisions of O.C.G.A. Title 46. Carriers may have one or more of the following classifications: (See Note)

*Class AF* carrier means carriers of passengers operating over fixed routes consisting of designated roads and highways between fixed termini in intrastate commerce under certificates of public convenience and necessity. (Prior to July 1, 1986, certificates authorizing service as defined above were classified as *"Class A"* certificates of public convenience and necessity. As of the effective date of this rule, no new Class AF certificates will be issued by the Commission).

*Class B* carrier means common carriers of passengers or common carriers of household goods operating over the highways of the State of Georgia over no fixed route in intrastate commerce under certificates of public convenience and necessity.

*Class G* carrier means motor carriers engaged in interstate operations exempt from economic regulation by the FMCSA and operating over the highways of the State of Georgia under Registration Permits.

*Class IE* carrier means a for hire passenger carrier not using limousines as defined in O.C.G.A.§ 46-7-85.1(4) transporting 10 or less passengers (ref. O.C.G.A. §46-1-1(9)(C)(xiii) and §46-7-15(a)).

*Passenger Permit* carrier means a motor carrier of passengers engaged in transporting more than 10 passengers (excluding driver) for compensation in charter service.

*Property Permit* carrier means common or contract carriers engaged in the transportation of general commodities (except household goods) operating over the highways of the State of Georgia over no fixed route.

*Single State Registration* carrier means common or contract carriers engaged in the transportation of general commodities or passengers in interstate commerce under the provisions of 49 U.S.C.§ 13902 and 49 CFR, Part 367.

**NOTE: All for hire carriers required to obtain any of the above certificates, permits, or registrations are subject to the Commission's safety and hazardous materials rules.**

*Certificate* means a certificate of public convenience and necessity issued by the Public Service Commission, whether interim or permanent. (ref. O.C.G.A. §46-1-1)

*CFR* means the United States Code of Federal Regulations, and as it may be amended from time to time in the Federal Register.

*Chauffeur* means any person who meets the qualifications as prescribed in O.C.G.A. §46-7-85.10 and who is authorized by the Public Service Commission to drive a limousine. (ref. O.C.G.A. §46-7-85.1)

*Commission* means the Public Service Commission. (ref. O.C.G.A. §46-1-1)

*Company* means a corporation, a firm, a partnership, an association, or an individual. (ref. O.C.G.A. §46-1-1)

*FHWA* means the Federal Highway Administration and any successor agencies of the United States Department of Transportation

*FMCSA* means the Federal Motor Carrier Safety Administration and any successor agencies of the United States Department of Transportation

*For hire* means any activity wherein for compensation a motor vehicle and driver are furnished to a person by another person, acting directly or knowingly and willfully acting with another to provide the combined service of the vehicle and driver, and includes every person acting in concert with, under the control of, or under common control with a motor carrier who shall offer to furnish transportation for compensation. (ref. O.C.G.A. §46-1-1)

*Forest products carrier* means a carrier engaged in the transportation of unmanufactured forest products whose vehicles are subject to the safety jurisdiction of the Commission pursuant to O.C.G.A. §46-1-1(9)(C)(x) or §46-1-1(13)(A). For Forest Products Trucking Rules, see Subchapter 4-3 of these Transportation Rules.

*Forest products trucking rules* means the rules and regulations governing forest products carriers promulgated pursuant to O.C.G.A. §46-1-1(9)(C)(x) or §46-1-1(13)(A), and found in Subchapter 4-3 of these Transportation Rules.

*Hazardous materials* means:

(a) for general safety purposes the same meaning the term has under Federal Hazardous Materials Law (Title 49 U.S.C. §5101, et. seq.) and Federal Hazardous Materials Regulations (Title 49 CFR Parts 100–185, and as amended); and,

(b) for purposes of Commission hazardous materials permits the same meaning as the term defined in O.C.G.A. §46-11-3.

*Highway or Public Highway* means every public street, road, highway or thoroughfare of any kind in this state and includes the entire width between the boundary lines of every way publicly maintained when any part thereof is open to the use of the public for purposes of vehicular travel. (ref. O.C.G.A. §40-1-1 and § 46-1-1)

*Household goods* as used in connection with transportation means personal effects and property used or to be used in a dwelling, when a part of the equipment or supply of such dwelling, and similar property if the transportation of such effects or property is

(a) arranged and paid for by the householder.

(b) arranged and paid for by another party.

*ICC* means the United States Interstate Commerce Commission and any successor agencies.

*Intercorporate carrier* means a carrier who engages in compensated intercorporate hauling whereby transportation of property is provided by a person who is a member of a corporate family for other members of such corporate family. Intercorporate carriers engaged in intrastate commerce must obtain property permits. (ref. O.C.G.A.§ 46-1-1)

*Interim Certificate* means a certificate issued by the Commission for a twelve (12) month period prior to the issuance of a permanent certificate.

*Lightweight commercial motor vehicle* means any self propelled or towed vehicle less than 10,000 pounds gross vehicle weight rating or gross combination weight rating operated by: a for hire motor carrier; a carrier exempt from the economic jurisdiction of the Commission, but otherwise subject to the safety rules of the Commission; or a private carrier transporting hazardous materials in a quantity not required to be placarded.

*Limousine or Luxury Limousine* means any motor vehicle that meets the manufacturer's specifications for a luxury limousine with a designed seating capacity for no more than ten passengers and with a minimum of five seats located behind the operator of the vehicle, and which does not have a door at the rear of the vehicle designed to allow passenger entry or exit; further, no vehicle shall be permitted to be operated both as a taxicab and a limousine. (ref. O.C.G.A. §46-7-85.1)

*Limousine carrier* means any person operating a service regularly rendered to the public by furnishing transportation as a motor common carrier for hire, not over fixed routes, by means of limousines, or extended limousines, on the basis of telephone contract or written contract. (ref. O.C.G.A. §46-7-85.1)

*Motor carrier of property* means, for the purposes of insurance filing or obtaining of permits, a motor common or contract carrier engaged in transporting property, except household goods, in intrastate commerce in this state. (ref. O.C.G.A. §46-1-1)

*Motor common carrier* means every person owning, controlling, operating, or managing any motor propelled vehicle, and the lessees, receivers, or trustees of such person, used in the business of transporting for hire of persons or property, or both, otherwise than over permanent rail tracks, on the public highways of Georgia as a common carrier. (ref. O.C.G.A. §46-1-1)

*Motor contract carrier* means every person, except common carriers, owning, controlling, operating, or managing any motor propelled vehicle, and the lessees, or trustees of such persons or receivers appointed by any court used in the business of transporting persons or property for hire over any public highway in this state and not operated exclusively within the corporate limits of any city. (ref. O.C.G.A. §46-1-1)

*Motor vehicle* means any vehicle, machine, tractor, trailer, or semitrailer propelled or drawn by mechanical power and used upon the highways in the transportation of passengers or property, or any combination thereof, determined by the Public Service Commission. (ref. O.C.G.A. §46-1-1)

*O.C.G.A.* means the Official Code of Georgia, Annotated.

*Out of service order* means a prohibition against driving or operating a motor vehicle(s), moving or causing cargo to be moved, or conducting a motor carrier operation. (ref. 49 CFR §§383.5 and 390.5 and O.C.G.A. §40-5-152).

*Passenger* means a person who travels in a public conveyance by virtue of a contract, either express or implied, with the carrier as to the payment of the fare or that, which is accepted

as an equivalent therefor. The prepayment of fare is not necessary to establish the relationship of passenger and carrier. The term "passenger" shall mean and include express, mail, newspapers and/or baggage of passengers in the same vehicle or combination of vehicles with passengers, except as otherwise restricted in a certificate or by rule or regulation. (ref. O.C.G.A. §46-1-1)

*Passenger permit* means a motor carrier of passenger permit issued to motor carriers engaged in transporting more than 10 passengers (excluding the driver) for compensation in charter service.

*Permit* means:

(a) A registration permit issued by the Public Service Commission authorizing interstate transportation for hire exempt from the jurisdiction of the Interstate Commerce Commission or Federal Motor Carrier Safety Administration, or intrastate transportation for hire exempt from the jurisdiction of the Public Service Commission or intrastate transportation by a motor carrier of property (ref. O.C.G.A. §46-1-1); or

(b) A hazardous materials permit issued pursuant to the provisions of Chapter 11 of Title 46 of the Official Code of Georgia, Annotated (O.C.G.A.§46-11-4).

*Person* means any individual, firm, partnership, trust, private or public corporation, municipality, county, political subdivision, public authority, cooperative, association, joint stock association, company, or public or private organization of any character and includes any trustee, receiver, assignee or personal representative thereof. (ref. O.C.G.A. §46-1-1 and §46-7-85.1(6) )

*Principle Place of Domicile* means the principal place in which a carrier conducts its business.

*Private carrier* means every person except motor common or contract carriers owning, controlling, operating, or managing any motor propelled vehicle, and the lessees or trustees thereof or receivers appointed by any court whatsoever, used in the business of transporting persons or property in private transportation not for hire over any public highway in this state Private carriers are generally subject to the Commission's safety and hazardous materials rules. Certain types of private carriers are exempted from the Commission's jurisdiction. (ref. O.C.G.A. §46-1-1)

*Property permit* means a motor carrier of property permit issued pursuant to the provisions of O.C.G.A. §46-7-15.1.

*RSPA* means the Research and Special Programs Administration of the United States Department of Transportation or any successor agency.

*Road-building material* means fill dirt, rock or other sub-base, concrete, asphalt or any other material to be used in the actual construction of a public highway, provided, however, "road-building material" does not include materials designated as hazardous materials pursuant to Title 49 U.S.C. §5101, et. seq.

*Railroad Corporation or Railroad Co.* means all corporations, companies, individuals, or associations of persons, whether incorporated or otherwise, that engage in business as common carriers upon any of the lines of railroads operating in this state.

*Single Source Leasing* means whereby a leasing company whose primary business is leasing vehicles and who operates a fleet of ten or more vehicles provides vehicle equipment and drivers in a single transaction to a private carrier and is presumed to result in private carriage by the shipper if the requirements enumerated in O.C.G.A.§46-1-1(9)(C)(ix) are met and are subject only to the Commission's safety and hazardous materials rules.

*Single State Registration Receipt* means a registration receipt issued to interstate motor carriers by their base state, identifying the carrier and specifying the states in which the carrier is authorized to operate pursuant to 49CFR §367.5.

*Single State Registration System (SSRS)* means the requirements for registration of interstate carriers with their base state for issuance of registration receipts as described in 49 CFR Part 367.

*Temporary Emergency Authority* means a temporary grant of operating authority by the Commission under the provisions of Commission Transportation Rule 5-1-2.13. A Temporary Emergency is an immediate and unmet need for which there is no certificated carrier authorized and capable of meeting such need, or refusal by carrier to meet such need, which can be met by qualified applicant within not more than an aggregate of thirty days unless otherwise provided.

*USDOT* means the United States Department of Transportation.

*Utility* means any person who is subject in any way to the lawful jurisdiction of the Commission (ref. O.C.G.A. §46-1-1).

*Vehicle* means any vehicle, machine, tractor, trailer, or semitrailer propelled or drawn by mechanical power and used upon the highways in the transportation of passengers or property, or any combination thereof, determined by the Public Service Commission (ref. O.C.G.A. §46-1-1).

**3-2.1 Operations Conducted in Certificate or Permit Name.**

All operations must be conducted and business transacted under the name of the owner, or owner with an operating name, or name of incorporation shown on the certificate, permit, or registration receipt. Individuals, partnerships or corporate owners of certificates or permits may request a change in the doing business as (D.B.A.) name by filing a request with the Commission. Certificated carriers may make application for transfer of a permanent certificate to a different individual, partnership or corporate owner by complying with all the rules relating to transfer of permanent certificates (Commission Transportation Rule 5-1-2.15). Permitted carriers must apply for a new permit if there is a change in ownership.

**3-2.3 Cancellation Due to Fraud.**

Any certificate, permit or registration receipt obtained by any fraudulent means shall be subject to cancellation upon discovery of such.

**3-2.5 Designation of Process Agent.**

No for hire motor carrier shall engage in intrastate or interstate operations within the borders of the State of Georgia unless and until there shall have been filed with and accepted by this Commission a currently effective designation of a local agent for service and process. Said carrier shall file such designation by showing the name and address of such agent on forms prescribed by the Commission or by furnishing this Commission with a true copy of the designation of such agent filed with the Federal Highway Administration.

**3-3.1 Civil Penalties - General. (See Chapter 10 for Civil Penalty Procedures).**

(a) Any person, firm or corporation (hereinafter referred to as "utility"), subject to the jurisdiction of the Public Service Commission, who shall willfully violate any law administered by the Commission, or any duly promulgated regulation issued thereunder, and any utility who fails, neglects or refuses to comply with any order, after notice thereof, shall be liable to a penalty not to exceed $15,000 for said violation and an additional penalty not to exceed $10,000 for each day during which such violation continues.

(b)(1) The Commission, after hearing as provided for in Chapter 10 of the Commission's rules, upon not less than 30 days notice, shall determine whether any utility has willfully violated any law administered by the Commission, or any duly promulgated regulation issued thereunder, or has failed, neglected or refused to comply with any order of the Commission, and upon appropriate finding thereof may impose such civil penalties as herein provided by order for such violations. In each such proceeding, the Commission shall maintain a record including all pleadings, a transcript of proceedings, a statement of each matter of which the Commission takes official notice, and all staff memoranda or data submitted to the Commission in connection with their consideration of the case. All penalties and interest thereon (at the rate of 10 percent per annum) recovered by the Commission shall be paid into the general fund of the State treasury.

(2) Any party aggrieved by a decision of the Commission may seek judicial review as provided in (c) below.

(c)(1) Any party who has exhausted all administrative remedies available before the Public Service Commission and who is aggrieved by a final decision of the Commission in a proceeding described in subsection (b) of this section may seek judicial review of the final order of the Commission in the Superior Court of Fulton County.

(2) Proceedings for review shall be instituted by filing a petition within 30 days after the service of the final decision of the Commission or, if a rehearing is requested, within 30 days after the decision thereon. A motion for rehearing or reconsideration after a final decision by the Commission shall not be a prerequisite to the filing of a petition for review. Copies of the petition shall be served upon the Commission and all parties of record before the Commission.

(3) The petition shall state the nature of the petitioner's interest, the facts showing that petitioner is aggrieved by the decision and the ground, as specified in subsection (c)(6) of this section, upon which the petitioner contends that the decision should be reversed. The petition may be amended by leave of court.

(4) Within 30 days after service of the petition, or within such further time as is stipulated by the parties or as is allowed by the court, the agency shall transmit to the reviewing court the original or a certified copy of the entire record of the proceedings under review. By stipulation of all parties to the review proceedings, the record may be shortened. A party unreasonably refusing

to stipulate that the record be limited may be taxed for the additional costs. The court may require or permit subsequent corrections or additions to the record.

(5) If, before the date set for hearing, application is made to the court for leave to present additional evidence, and it is shown to the satisfaction of the court that the additional evidence is material and there were good reasons for failure to present it in the proceedings before the agency, the court may order that the additional evidence be taken before the Commission upon such procedure as is determined by the court. The Commission may modify its findings and decision by reason of the additional evidence and shall file that evidence and any modifications, new findings, or decisions with the reviewing court.

(6) The review shall be conducted by the court without a jury and shall be confined to the record. The court shall not substitute its judgment for that of the Commission as to the weight of the evidence on questions of fact. The court may affirm the decision of the Commission or remand the case for further proceedings. The court may reverse the decision of the Commission if substantial rights of the petitioner have been prejudiced because the Commission's findings, inferences, conclusions, or decisions are:

(i) In violation of constitutional or statutory provisions;
(ii) In excess of the statutory authority of the Commission;
(iii) Made upon unlawful procedure;
(iv) Clearly not supported by any reliable, probative, and substantial evidence on the record as a whole; or
(v) Arbitrary or capricious.

(7) A party aggrieved by an order of the court in a proceeding authorized under subsection (b) of this rule may appeal to the Supreme Court of Georgia or to the Court of Appeals of Georgia in accordance with Article 2 of Chapter 6 of Title 5 of O.C.G.A., the "Appellate Practice Act."

**3-3.3 Criminal Penalties – General.**

Every officer, agent, or employee of any company under the jurisdiction of the commission who violates or procures, aids, or abets any violation by any such company of any provision of Title 46 O.C.G.A.; or who fails to obey, observe, or comply with any order of the commission; or who aids or abets any such company in its failure to obey, observe, and comply with any such order, direction, or provision, shall be guilty of a misdemeanor. Such officer, agent, or employee shall be subject to prosecution in any county in which the company or the officer, agent, or employee violates any provision of this title or any provision of any order of the commission, or in any county through which the company operates. Such officer, agent, or employee shall also be subject to prosecution under this title in any county in which a subordinate agent or employee of the company violates any provision of this title, by the approval or direction, or in consequence of the approval or direction, of such officer, agent, or employee; and the agent or employee who locally in any county violates the rules or directions of said commission pursuant to the direction or authority of a superior officer may be called as a witness and be compelled to testify as to the authority by which he acted. Such testimony shall not be used against such subordinate employee or agent, nor shall he thereafter be subject to prosecution for said offense.

# TRANSPORTATION RULES
# OF
# GEORGIA PUBLIC SERVICE COMMISSION

## CHAPTER 4: SAFETY AND HAZARDOUS MATERIALS RULES AND REGULATIONS

## Table Of Contents

**Subchapter 4-1 Motor Carrier Safety**
**Subchapter 4-2 Hazardous Materials Safety**
**Subchapter 4-3 Georgia Forest Products Trucking Rules**
**Subchapter 4-4 Limousine Safety Rules**
**Subchapter 4-5 Safety Operations Reviews**

# TRANSPORTATION RULES
# OF
# GEORGIA PUBLIC SERVICE COMMISSION

## SUBCHAPTER 4-1: MOTOR CARRIER SAFETY

### Table Of Contents


| | |
|---|---|
| **Part 4-1-1** | **Purpose and Applicability** |
| **Part 4-1-350** | **Commercial Motor Carrier Safety Assistance Program** |
| **Part 4-1-382** | **Controlled Substances and Alcohol Use and Testing** |
| **Part 4-1-383** | **Commercial Driver's License Standards; Requirements and Penalties** |
| **Part 4-1-390** | **General** |
| **Part 4-1-391** | **Qualifications of Drivers** |
| **Part 4-1-392** | **Driving of Commercial Motor Vehicles** |
| **Part 4-1-393** | **Parts and Accessories Necessary for Safe Operation** |
| **Part 4-1-394** | **Removed and Reserved** |
| **Part 4-1-395** | **Hours of Service of Drivers** |
| **Part 4-1-396** | **Inspection, Repair and Maintenance** |
| **Part 4-1-397** | **Transportation of Hazardous Materials; Driving and Parking Rules** |


### 4-1-1.1 Applicability.

(a)The motor carrier safety rules and regulations of the Georgia Public Service Commission are the minimum safety requirements for all motor carriers operating both for hire and in private transportation in either interstate or intrastate commerce in Georgia, and to the extent that they do not conflict with Georgia law; and where applicable, are the same as the Motor Carrier Safety Regulations issued by the U.S. Department of Transportation, Federal Motor Carrier Safety Administration, contained in Title 49 of the Code of Federal Regulations, Parts 350, 382, 383, and 390 through 397 (see Note), and as amended. (**See Individual Section Pages and Notes**).

(b) All references to the U.S. Department of Transportation except when used to designate approval of mechanical specifications shall be interpreted to mean the Georgia Public Service Commission.

(c) Any reference in the regulations to the "Administrator, Federal Motor Carrier Safety Administration" shall be interpreted to mean Director, Transportation Division, Georgia Public Service Commission, except insofar as the term relates to preemption.

(d) All references to "interstate" commerce shall be interpreted to include "intrastate" commerce. It is the intent of the Commission that the regulations shall apply to intrastate carriers and their operations.

(e) Where the Federal regulations as adopted by the Commission refer to "carriers" or "motor carriers," the term shall mean all for hire and private motor carriers subject to the Commission's jurisdiction pursuant to Title 46 O.C.G.A.

**Note: Copies of the U.S. Department of Transportation's Motor Carrier Safety Regulations may be obtained from the U.S. Government Printing Office, Superintendent of Documents, Washington, D. C. 20402**

**4-1-1.2 Reports.**

(a) All reports required by the safety regulations shall be sent to the Georgia Public Service Commission, Transportation Division, 1007 Virginia Avenue, Suite 310, Hapeville, Georgia 30354-1325, in addition to any copies required to be sent to any Federal Agency.

(b) The Georgia Public Service Commission will accept forms prescribed by the U.S. Department of Transportation where required by the safety regulations.

**4-1-1.3 Penalties.**

(a) *Criminal penalty.* In addition to any other penalty imposed by law, violations of any provision of this chapter shall constitute a misdemeanor, pursuant to O.C.G.A. §46-2-93 and §46-7-39.

(b) *Civil penalty.* In addition to any other penalty imposed by law, violations of this chapter shall be subject to the provisions of O.C.G.A. §46-2-91.

**4-1-1.4 Construction.**

(a) Unless amended herein, the rules in this chapter numbered beyond 4-1-300 shall generally be the same as the rules contained in the Federal Motor Carrier Safety Regulations. Where reference is made to a federal rule number (e.g., "390.5") the compatible state rule shall be deemed to be "4-1-" followed by the Federal rule number (e.g., "49 CFR §390.5" becomes "4-1-390.5").

(b) References on Commission documents to a Federal rule by Federal Section number shall be construed as a valid cite of the Commission's rules and regulations without listing the entire Commission section reference (e.g., "390.15" equals "4-1-390.15").

## Part 350

## Commercial Motor Carrier Safety Assistance Program

**4-1-350 Commercial Motor Carrier Safety Assistance Program.**

Except as amended by the Commission herein, the balance of Rule 4-1-350 is contained in Commercial Motor Carrier Safety Assistance Program Regulations issued by the Federal Motor Carrier Safety Administration, U.S. Department of Transportation, Title 49 CFR Part 350, and as amended.

**4-1-350.1 Purpose.**

Insofar as necessary to insure consistency with federal regulations, the Commission adopts this Part in order to assist with the implementation and maintenance of an ongoing motor carrier and hazardous materials safety program.

## Part 382

## Controlled Substances and Alcohol Use and Testing

**4-1-382 Controlled Substances and Alcohol Use and Testing**.

Except as amended by the Commission herein, the balance of Rule 4-1-382 is contained in Controlled Substance and Alcohol Use and Testing Regulations issued by the Federal Motor Carrier Safety Administration, U.S. Department of Transportation, Title 49 CFR Part 382, and as amended.

Reserved (No Commission amendments)

## Part 383

## Commercial Driver's License Standards; Requirements and Penalties

**4-1-383 Motor Carrier Safety Regulations—Commercial Driver's License Standards**.

Except as amended by the Commission herein, the balance of Rule 4-1-383 is contained in Commercial Driver's License Regulations issued by the Federal Motor Carrier Safety Administration, U.S. Department of Transportation, Title 49 CFR Part 383, and as amended.

Reserved (No Commission amendments)

## Part 390

## General

**4-1-390 Motor Carrier Safety Regulations—General**.

Except as amended by the Commission herein, balance of Rule 4-1-390 is contained in the Motor Carrier Safety Regulations issued by the Federal Motor Carrier Safety Administration, U.S. Department of Transportation, in Title 49 CFR Part 390, and as amended.

## Subpart A—General Applicability and Definitions

**4-1-390.3 (a) & (f) General Applicability.**

(a) The rules in Subchapter B of this chapter are applicable to all employers, employees, and commercial motor vehicles, which transport property or passengers in interstate or intrastate commerce.

(f) *Exceptions*. All motor carriers and commercial motor vehicles are subject to and shall comply with the motor carrier safety rules as prescribed by the Commission. The Commission's rules do not apply to:

(1) All school bus operations as defined in 390.5;

(2) Transportation performed by the Federal government, the State of Georgia, or any political subdivision of a State, or an agency established under a compact between States that has been approved by the Congress of the United States.

(3) The occasional transportation of personal property by individuals not for compensation nor in the furtherance of a commercial enterprise;

(4) The transportation of human corpses or sick and injured persons;

(5) The operation of fire trucks and rescue vehicles while involved in emergency and related operations;

(6) Those carriers excepted pursuant to the provisions of Title 46 O.C.G.A.

**4-1-390.5 Definitions.**

Except as amended by the Commission herein, balance of 4-1-390.5 definitions are contained in the Motor Carrier Safety Regulations issued by the Federal Motor Carrier Safety Administration, U.S. Department of Transportation, 49 CFR §390.5, and as amended.

The following definitions are inserted in the appropriate alphabetical order:

*Commercial Motor Vehicle* (CMV) means any self-propelled or towed vehicle used on public highways in interstate or intrastate commerce to transport property or passengers when the vehicle—

(a) Has a gross vehicle weight rating or gross combination weight rating, or gross vehicle weight or gross combination weight of 10,001 pounds or more, whichever is greater; or

(b) Is designed to transport 16 or more, including the driver; or

(c) Is of any size and used in the transportation of hazardous materials under regulations issued by the Commission under Subchapter 4-2, the Hazardous Material Safety Rules; or

(d) Is of any size and is operated by a for hire motor common or contract carrier or a carrier exempt from the economic regulations of the Commission, but is otherwise subject to the Safety Rules of the Commission (For "lightweight commercial motor vehicle" see definition this section).

*Exempt intracity zone* means the corporate limits of a municipality only as related to motor vehicles operated by for hire motor common or contract carriers and said vehicles are being operated exclusively within the corporate limits of a municipality, subject to the jurisdiction of the municipality.

*Exempt motor carrier* means a person engaged in transportation exempt from economic regulation by the Interstate Commerce Commission, U.S. Department of Transportation, or their successor agencies under 49 U.S.C. 10526; or the Georgia Public Service Commission under O.C.G.A. §46-1-1(9)(C)(xi), (xii), (xiii), or (xiv); or a motor carrier engaged in the contract transportation of U.S. Mail. "Exempt motor carriers" are subject to the Commission's safety rules and regulations.

*Lightweight commercial motor vehicle* means any self-propelled or towed vehicle less than 10,001 pounds gross vehicle weight rating or gross combination weight rating, and with a seating capacity of less than 16 persons, including the driver, operated by:

(a) a for hire motor carrier; or

(b) a carrier exempt from the economic jurisdiction of the Commission but otherwise subject to the safety rules of the Commission; or

(c) a private carrier transporting hazardous materials in a quantity not required to be placarded. "Lightweight commercial motor vehicles" must only comply with the following safety regulations: §§390.19; 391.11(b)(2), (3), (5), and (7); all of part 392 except §§392.8, 392.22, 392.62, and 393.63; all of part 393, except §393.95; all of part 396, except §§396.3(b), 396.11; 396.13, 396.15, and 396.17 (For marking requirements of lightweight commercial motor vehicles, see Commission Transportation Rule 8-4.2).

*Limousine or Luxury limousine* means a motor vehicle as defined in Commission Transportation Rule 3-1.5. Limousine vehicles that do not meet the definition of "luxury limousine" are included in the definition of "lightweight commercial motor vehicle." (For safety requirements for luxury limousines, see Subchapter 4-4 of the Commission's Transportation Rules.)

*Person* - (See Commission Transportation Rule 3-1.5 for definition).

*Private motor carrier of property* means every person except motor common or contract carriers owning, controlling, operating, or managing any motor propelled vehicle, and the lessees or trustees thereof or receivers appointed by any court whatsoever, used in the business of transporting property in private transportation not for hire over any public highway in this state. The term "private carrier" shall not include:

(a) Motor vehicles not for hire engaged solely in the harvesting or transportation of forest products; provided, however, that motor vehicles not for hire with a manufacturer's gross weight rated capacity of 44,000 pounds or more engaged solely in the transportation of unmanufactured forest products shall be subject to the Georgia Forest Products Trucking Rules provided for in O.C.G.A. §46-1-1; or

(b) Motor vehicles not for hire engaged solely in the transportation of road-building materials; or

(c) Motor vehicles not for hire engaged solely in the transportation of unmanufactured agricultural or dairy products between farm, market, gin, warehouse, or

mill whether such vehicle is owned by the owner or producer of such agricultural or dairy products or not, so long as the title of the product remains in the name of the producer; or

(d) Except for the motor vehicles excluded under subparagraph (c) of this paragraph, motor vehicles having a manufacturer's gross vehicle weight rating of 10,000 pounds or less; provided, however, that motor vehicles which have a manufacturer's gross vehicle weight rating of 10,000 pounds or less and which are transporting hazardous materials, as defined in Title 49 CFR, Parts 107, 130, 171-173, and 177-180, shall be included within the meaning of the term "private carrier."

*Road-building material* (See Commission Transportation Rule 3-1.5 for definition).

*Special Agent* See Appendix B to Subchapter B—Special Agents. Any reference to "Special Agent" shall also include any law enforcement personnel of the Commission designated pursuant to O.C.G.A. §46-7-28, §46-11-6, and Commission Transportation Rule 1-3.3.

*Surge brakes* means a system of brakes on a trailer or semitrailer in which the trailer service brakes are activated as a result of the forward pressure of the trailer against the towing vehicle during deceleration.

**4-1-390.15(c) Assistance in investigations and special studies.**

(c) Motor carriers shall obtain and maintain on file for a period of at least one year a legible copy of any police or insurance company accident report for any accident involving motor vehicles which they own or control.

**4-1-390.17 Additional equipment and accessories.**

Nothing in this subchapter shall be construed to prohibit the use of additional equipment and accessories, not inconsistent with or prohibited by this subchapter, provided such equipment and accessories do not decrease the safety of operation of the motor vehicles on which they are used.

**4-1-390.19(j) – (m) Motor carrier identification report.** (Intrastate motor carriers)

(j) *Motor carrier identification report*.

(1) All motor carriers currently conducting operations solely in intrastate commerce shall file with the Commission a Motor Carrier Identification Report (Form PSC MCS–150 GA), and obtain a motor carrier identification number. Exception: The provisions of this paragraph do not apply to a motor carrier that:

(i) Also engages in interstate or foreign commerce, and

(ii) Has filed an MCS–150 with the FMCSA, or

(iii) Has received written notification of a safety rating from FMCSA.

(2)(i) All private motor carriers beginning operation after the effective date of this rule shall file the Motor Carrier Identification Report (Form PSC MCS–150 GA), within 90 days after beginning operations; and,

(ii) All for-hire motor carriers beginning operation after the effective date of this rule shall file the Motor Carrier Identification Report (Form PSC MCS–150 GA), prior to beginning operations.

(3) The Motor Carrier Identification Report, Form PSC MCS–150 GA, is available from the Georgia Public Service Commission, P.O. Box 82352, Hapeville, Georgia 30354, or by calling (404) 559-6611. A copy may also be downloaded from the Commission's web site at http://www.psc.state.ga.us/

(4) The completed Motor Carrier Identification Report (Form PSC MCS–150 GA) shall be filed in one of the following ways:

(i) By mail: Georgia Public Service Commission, P.O. Box 82352, Hapeville, Georgia 30354, or

(ii) By facsimile: (404) 669-3324, or

(iii) In person: Georgia Public Service Commission, 1007 Virginia Avenue, Suite 310, Hapeville, Georgia 30354.

(5) A carrier which engages solely in intrastate commerce and subsequently begins interstate operations shall comply with the provisions of Title 49 CFR §390.19, and shall submit a copy of the FMCSA MCS–150 to the Commission in one of the manners listed above.

(k) *Name to be used.* Only the legal name or a single trade name of the motor carrier may be used on the Motor Carrier Identification Report (Form PSC MCS-150 GA).

(l) *Display requirement*. Upon receipt and processing of the Motor Carrier Identification Report, Form PSC MCS-150 GA, the Commission will issue the motor carrier identification number (USDOT number). The motor carrier must display the number on each self-propelled commercial motor vehicle (except lightweight commercial motor vehicles), as defined in §4-1-390.5, along with the additional information required by §4-1-390.21.

(m) *Failure to report*. Failure by a motor carrier to file a Motor Carrier Identification Report, Form PSC MCS–150 GA, pursuant to the provisions of this section, or furnishing misleading information or making false statements upon the PSC MCS–150 GA shall subject the offender to civil and/or criminal penalties as provided for by law.

**4-1-390.21 Marking of commercial motor vehicles and motor carrier identification numbers.**

(a) *General*. Every self-propelled commercial motor vehicle operated in interstate or intrastate commerce and subject to the Commission Transportation Rules in subchapters 4-1, 4-2, or 4-4 must be marked as specified in paragraphs (b), (c) and (d) of this section.

(b) *Nature of marking*. The marking must display the following information:

(1) The legal name or a single trade name of the motor carrier operating the self-propelled commercial motor vehicle, as listed on the motor carrier identification report (Form MCS-150 or PSC MCS-150 GA) and submitted in accordance with § 4-1-390.19.

(2) The motor carrier identification number issued by the FMCSA or the Commission, preceded by the letters “USDOT” (Example: USDOT 0000000).

(2.1) If the carrier is engaged solely in intrastate transportation, the motor carrier identification number preceded by the letters “USDOT” and followed by the letters “GA” (Example: USDOT 000000 GA). A solely intrastate motor carrier shall affix to all self-propelled motor vehicles the motor carrier identification number described herein within 30 days of obtaining said number.

(3) If the name of any person other than the operating carrier appears on the commercial motor vehicle, the name of the operating carrier must be followed by the information required by paragraphs (b)(1), and (2) of this section, and be preceded by the words “operated by.”

(4) Other identifying information may be displayed on the commercial motor vehicle if it is not inconsistent with the information required by this paragraph.

(5) Each motor carrier shall meet the following requirements pertaining to its operation:

(i) All commercial motor vehicles that are part of a motor carrier's existing fleet on July 3, 2000, and which are marked with an ICC MC number must come into compliance with paragraph (b)(2) or (2.1) of this section by July 3, 2002.

(ii) All commercial motor vehicles that are part of a motor carrier's existing fleet on July 3, 2000, and which are not marked with the legal name or a single trade name on both sides of their commercial motor vehicles, as shown on the Motor Carrier Identification Report, Form MCS-150 or PSC MCS-150 GA, must come into compliance with paragraph (b)(1) of this section by July 5, 2005.

(iii) All commercial motor vehicles added to a motor carrier's fleet on or after July 3, 2000, must meet the requirements of this section before being put into service and operating on the public highways. Any commercial motor vehicles that are part of a motor carrier's existing fleet on July 3, 2000, that were not marked in compliance with the version of this rule that was in effect on July 2, 2000, must comply with all requirements of this amended section before continuing operation on the public highways of this state.

(c) *Size, shape, location, and color of marking*. The marking must —

(1) Appear on both sides of the self-propelled commercial motor vehicle;

(2) Be in letters that contrast sharply in color with the background on which the letters are placed;

(3) Be readily legible, during daylight hours, from a distance of 50 (15.24 meters) feet while the commercial motor vehicle is stationary; and

(4) Be kept and maintained in a manner that retains the legibility required by paragraph (c)(3) of this section.

(d) *Construction and durability.* The marking may be painted on the commercial motor vehicle or may consist of a removable device, if that device meets the identification and legibility requirements of paragraph (c) of this section, and such marking must be maintained as required by paragraph (c)(4) of this section.

(e) *Rented commercial motor vehicles*. A motor carrier operating a self-propelled commercial motor vehicle under a rental agreement having a term not in excess of 30 calendar days meets the requirements of this section if:

(1) The commercial motor vehicle is marked in accordance with the provisions of paragraphs (b) through (d) of this section; or

(2) The commercial motor vehicle is marked as set forth in paragraph (e)(2)(i) through (iv) of this section:

(i) The legal name or a single trade name of the lessor is displayed in accordance with paragraphs (c) and (d) of this section;

(ii) The lessor's identification number, issued by the FMCSA or the Commission, preceded by the letters "USDOT" is displayed in accordance with paragraphs (c) and (d) of this section; and

(iii) The rental agreement entered into by the lessor and the renting motor carrier conspicuously contains the following information:

(A) The name and complete physical address of the principal place of business of the renting motor carrier;

(B) The identification number issued the renting motor carrier by the FMCSA or the Commission, preceded by the letters "USDOT," if the motor carrier has been issued such a number. In lieu of the identification number required in this paragraph, the following may be shown in the rental agreement:

(1) Information which will indicate if the motor carrier is engaged in "interstate" or "intrastate" commerce; and

(2) Information which indicates whether the renting motor carrier is transporting hazardous materials in the rented commercial motor vehicle.

(C) The sentence: "This lessor cooperates with all federal, state, and local law enforcement officials nationwide to provide the identity of customers who operate this rental commercial motor vehicle;" and

(iv) The rental agreement entered into by the lessor and the renting motor carrier is carried on the rental commercial motor vehicle during the full term of the rental agreement. See the leasing regulations at 49 CFR 376 for information that should be included in all leasing documents.

(f) *Driveaway services.* In driveaway services, a removable device may be affixed on both sides or at the rear of a single driven vehicle. In a combination driveaway operation, the device may be affixed on both sides of any one unit or at the rear of the last unit. The removable device must display the legal name or a single trade name of the motor carrier and the motor carrier's USDOT number.

**4-1-390.23(a)(3)(i) Tow trucks responding to emergencies.**

The exemption provided by paragraph (a)(3) of this section is effective only when a request has been made by a Federal, State or local police officer for tow trucks to move wrecked or disabled motor vehicles. The exemption shall apply to Parts 393 and 396 of these regulations only until the wrecked or disabled vehicles can be removed from the roadway to a place of safety where the tow operator can comply, not to exceed five miles distance, or, on a limited access highway, the next available exit, rest area, weigh station, or accident investigation site, whichever comes first.

## Part 391

## Qualifications of Drivers

**4-1-391 Motor Carrier Safety Regulations—Qualifications of Drivers.**

Except as amended by the Commission herein, Balance of Rule 4-1-391, is contained in the Motor Carrier Safety Regulations issued by the Federal Motor Carrier Safety Administration, U.S. Department of Transportation, Title 49 CFR Part 391, and as amended.

**4-1-391.2(f) General exemptions.**

(f) *Limited exceptions for intrastate drivers.* Drivers of commercial motor vehicles are excepted from the following provisions of Part 391 if the terms and conditions contained herein are met:

(1) §391.41(b)(3), relating to diabetes mellitus;

(2) §391.41(b)(8), relating to epilepsy;

(3) §391.41(b)(10), relating to visual acuity, provided the driver has distant visual acuity of at least 20/40 (Snellen) in one eye without corrective lenses or visual acuity of corrected to 20/40 (Snellen) or better with corrective lenses, distant monocular acuity of at least 20/40 (Snellen) in one eye with or without corrective lenses, field of vision of at least 70 degrees in the horizontal meridian in one eye, and the ability to recognize the colors of traffic signals and devices showing standard red, green, and amber.

(4) No driver may be grandfathered under the provisions of this section after March 31, 1993. Provided, however, a driver who is "grandfathered" under the above provisions will remain qualified to operate a commercial motor vehicle under the exceptions provided for in subparagraphs (1), (2), and (3) of this section so long as the driver is physically examined every 24 months and the examining physician determines that the existing medical or physical condition that would render the driver not qualified under the Federal Motor Carrier Safety Regulations has not worsened or another condition has not manifested itself.

**4-1-391.43(d) and (f) Medical examination; certificate of physical examination.**

(d)(1) Any driver authorized to operate a commercial motor vehicle within an exempt intracity zone pursuant to §391.62 shall furnish the examining medical examiner with a copy of the medical findings that led to the issuance of the first medical examination which allowed the driver to operate a commercial motor vehicle wholly within an exempt intracity zone.

(2) Any driver authorized to operate a commercial motor vehicle solely in intrastate commerce pursuant to §391.2(f) shall furnish the examining medical examiner with a copy of the medical findings that led to the issuance of the first medical examination which allowed the driver to operate a commercial motor vehicle solely in intrastate commerce.

(f)(4) If a medical examiner determines the driver is qualified to drive only a commercial motor vehicle in intrastate commerce pursuant to §391.2(f), the following statement or other statement identifying the holder as a grandfathered driver, shall appear on the medical examiner's certificate: "MEDICALLY UNQUALIFIED UNLESS DRIVING INTRASTATE."

**4-1-391.61 Drivers who were regularly employed before January 1, 1971, July 1, 1972, and April 1, 1984.**

(a) The provisions of §391.21 (relating to applications for employment), §391.23 (relating to investigations and inquiries), §391.31 and §391.33 (relating to road tests) do not apply to a driver who has been a single-employer driver (as defined in §390.5 of this subchapter) of an interstate motor carrier for a continuous period which began before January 1, 1971, as long as he/she continues to be a single-employer driver of that motor carrier.

(b) The qualification file for a driver of a for hire motor carrier engaged solely in intrastate commerce who has been a regularly employed driver of the motor carrier for a continuous period which began before July 1, 1972 must include, as minimum, the following:

(1) The medical examiner's certificate of his/her physical qualification to drive a motor vehicle or a legible copy of the certificate;

(2) The letter granting a waiver of a physical disqualification, if a waiver was issued under §391.49;

(3) The note relating to annual review of the driver's driving record required by §391.25;

(4) The response of each state agency to the driver's record inquiry required by 391.25(a); and,

(5) Any other matter which relates to the driver's qualifications or ability to drive a motor vehicle safely.

(c) The qualification file for a driver of a private carrier engaged solely in intrastate commerce who has been a regularly employed driver of the motor carrier for a continuous period which began before April 1, 1984 must include, as minimum, the documents specified in paragraph (b) of this section.

**4-1-391.75 Drivers of lightweight commercial motor vehicles; intrastate drivers.**

The provisions of §391.11(b)(1) (relating to minimum age) do not apply to: A driver of a lightweight commercial motor vehicle as defined in §390.5 operated in interstate or intrastate commerce; and a driver of a commercial motor vehicle engaged solely in intrastate commerce. The driver of a motor vehicle described in this section need only be 18 years of age.

## Part 392

## Driving of Commercial Motor Vehicles

**4-1-392 Motor Carrier Safety Regulations—Driving of Commercial Motor Vehicles.**

Except as amended by the Commission herein, Rule 4-1-392 is contained in Federal Motor Carrier Safety Regulations issued by the Federal Motor Carrier Safety Administration, U.S. Department of Transportation, Title 49 CFR Part 392, and as amended

**4-1-392.5(a)(3)(ii) Alcohol Prohibition.**

(ii) Possessed or used by bus or limousine passengers.

## Part 393

## Parts and Accessories Necessary for Safe Operation

**4-1-393 Motor Carrier Safety Regulations—Parts and Accessories Necessary for Safe Operation.**

Except as amended by the Commission herein, balance of Rule 4-1-393, is contained in Federal Motor Carrier Safety Regulations issued by the Federal Motor Carrier Safety Administration, U.S. Department of Transportation, contained in Title 49 CFR Part 393, and as amended.

**4-1-393.11PL Strobe lamp on the rear of projecting loads.**

(a) Motor vehicles transporting loads of logs, long pulpwood, poles, or posts which extend more than 4 feet beyond the body or bed of such vehicle, shall have securely affixed as close as practical to the end of such projections one amber strobe type lamp equipped with a multi-directional type lens so mounted as to be visible from the rear and sides of the projecting load. If the mounting of one strobe lamp cannot be accomplished so as to be visible from both sides and the rear of the projecting load, multiple strobe lamps shall be utilized so as the meet the visibility requirements.

(b) The strobe lamp shall flash a rate of at least 60 flashes per minute and shall be plainly visible from a distance of at least 500 feet to the sides and rear of the projecting load any time of the day or night. The lamp shall be operating at any time of the day or night when the vehicle is operated on any highway or parked on the shoulder or immediately adjacent to the traveled portion of any public roadway.

(c) The use of red marker lamps on projecting loads as enumerated in O.C.G.A. §40-8-27, being transported on vehicles under the jurisdiction of the Public Service Commission, are not required if a strobe lamp is utilized as required by this rule.

(d) The projecting load shall also be marked with flag(s) as required by §393.87 of these rules.

(e) In addition to the requirements of this section and §393.11 above, motor vehicles transporting projecting loads in interstate commerce are required to comply with the Federal Motor Carrier Safety Regulations under Title 49 CFR.

**4-1-393.41 (d) Parking brake system.**

(d) Every commercial motor vehicle, of a year model of 1966 or later, shall be equipped with a parking brake that meets the requirements of O.C.G.A. §40-8-52.

**4-1-393.42 (c) Brake Requirements for Manufactured Homes, Modular Homes, Sectional Houses, and Portable Buildings, and (d) Surge Brakes.**

(c) Manufactured homes, modular homes, sectional houses and portable buildings in excess of 12 feet wide, must be equipped with operating brakes on at least one-half of the axles of the manufactured home, trailer or dolly transporting a modular home, sectional house or portable building. If unit has three (3) or more axles, at least two (2) axles must be equipped with functioning brakes.

(d) *Surge brakes.* Any trailer or semitrailer may utilize surge brakes, subject to the following conditions and limitations:

(1) The vehicle or combination of vehicles does not include a vehicle designed or used to transport 16 or more passengers, including the driver;

(2) The trailer or semitrailer has a gross vehicle weight rating which does not exceed 12,000 pounds;

(3) The combination of vehicles does not exceed a gross combination weight rating of 26,000 pounds;

(4) The actual gross weight of the trailer or semitrailer and load does not exceed the manufacturer's gross vehicle weight rating;

(5) The trailer or semitrailer brakes must be designed and connected in such a manner that in case of accidental breakaway of the towed vehicle the brakes shall apply automatically;

(6) The trailer or semitrailer is not used to transport hazardous materials in a type and quantity which requires placarding;

(7) The trailer or semitrailer is not used to transport liquids or gases contained in packaging which exceeds 119 gallons capacity; and

(8) The vehicle or combination of vehicles is used only in intrastate commerce and complies in all other respects with licensing, insurance, registration, identification, driver and vehicle safety, and hazardous materials regulations of the Georgia Public Service Commission and U. S. Department of Transportation applicable to such vehicles or combination of vehicles.

**4-1-393.87 Flags on projecting loads.**

(a) Any motor vehicle having a load or vehicle component which extends more than 4 inches beyond the sides or more than 4 feet beyond the rear shall have the extremities of the load marked with a red flag, not less than 12 inches square, at each point where a lamp is required by Commission Transportation Rule 4-1-393.11.

(b) The flag as required by Commission Transportation Rule §393.11PL shall be of a bright red or orange color not less than 12 inches square which is clearly visible and shall be displayed in such a manner that the entire area of the flag is visible from the rear of the vehicle. Such a display shall be accomplished by a rigid type flag, or a rigid type mounting frame for a flexible flag, or by other means at least as effective.

(c) Flags may be made either partially or completely of a retro reflective material.

**4-1-393.95 Emergency equipment**

(g) *Restrictions on the use of flame-producing devices.* No vehicle transporting unmanufactured forest products may be equipped with or use any flame-producing stopped vehicle warning devices, including, but not limited to, liquid-burning flares, fusees, oil lanterns.

**4-1-393.100(g) Special rule for unmanufactured forest products vehicles.**

(1) *Basic protection components.* Each cargo-carrying motor vehicle must be equipped with devices providing protection against shifting or falling cargo that meet the following requirements:

(a) Each motor vehicle transporting logs, tree-length pulpwood and short wood (pulpwood) equipped with permanent, fixed, or trip standards shall have the load secured with tie-downs meeting the requirements of §393.102, as follows:

(i) *Option A.* Each load of short pulpwood loaded perpendicular to the axis of the truck or trailer body shall be required to be secured by only one binder chain or cable, strap, or other chain meeting the specifications as provided in this paragraph.

(ii) *Option B.* Each tree-length load of pulpwood or logs shall be required to be secured with no less than two binder chains, cables, straps or other chains which shall be located at the center and end of the load. Such binder chains, cables, straps or other chains shall meet the specifications provided in this paragraph.

(iii) *Option C.* Each load of pulpwood or cut logs loaded on multiple racks, shall be required to be secured by only one binder chain meeting the specifications of this paragraph.

(iv) *Option D.* Each load of sawdust, wood chips, bark, or pine straw carried in open top trailers must be secured on the top with a tarpaulin or similar cover, which must prevent the loss of cargo in normal transportation. Tarpaulins alone may not be used for side securement, but may be used to supplement other side securement.

(b) All such chains, cables, or straps shall be equipped with load binder and hardware (tightening device). Said binders or tightening device shall meet the minimum strength requirements specified in paragraph (a), above.

(c) All pallets or racks used to carry pulpwood or logs shall be bound to the frame or body of the truck or trailer.

(d) All standards must be of metal construction of a strength which will secure the load if the load shifts.

(i) Each standard must be adequately anchored to the bolster in such a manner that the load will be secured if the load shifts.

(ii) Standard extensions must be of metal construction and firmly secured to the standard.

(iii) Each trip standard must be secured with a locking pin and cable of sufficient strength to hold the standard in an upright position if the load shifts.

(iv) Loads shall not extend beyond the height of the highest standard.

(v) Standards and standard extensions must not extend beyond a total trailer height of thirteen feet, six inches (13' 6").

(e) Chains, binders, cables, straps, and other securement devices must be in good condition. Chains may not be bolted together, and any repairs to chains must be of the clevis type and at least the strength of the original chain.

**4-1-393.201(a) Frames.**

(a) The frame of every motor vehicle shall not be cracked, loose, sagging, or broken.

**4-1-393.220 Tire covers (wheel flaps; mud flaps).**

Every bus, truck, trailer, semi-trailer, and pole trailer, shall be equipped with suitable metal protectors or substantial flexible flaps on the rearmost wheels to prevent, as far as practicable, such wheels from throwing dirt, gravel, rocks, water or other materials on the windshields of following vehicles. Such protectors or flaps shall have a ground clearance of not more than one-half the distance from the center of the rearmost axle to the center of the protector

or flap under any conditions of loading of the vehicle and shall be at least as wide as the tire or tires they are covering; provided, however, that if any such bus, truck, trailer, semi-trailer, and pole trailer is so designed and constructed that the foregoing requirements are accomplished by means of fenders, body construction, or other enclosures, then no such protectors or flaps shall be required. (See O.C.G.A. §40-8-75)

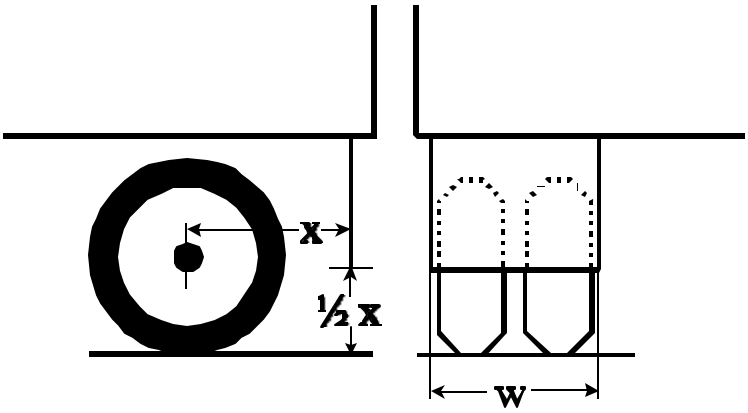


**x = distance from center of rear axle to flap**
**½x = min. clearance for flap from ground**
**w = flap width**

## Part 394

## Notification and Reporting of Accidents

**4-1-394 Motor Carrier Safety Regulations—Notification and Reporting of Accidents**.

Except as amended by the Commission herein, Rule 4-1-394 is contained in Federal Motor Carrier Safety Regulations issued by the Federal Motor Carrier Safety Administration, U.S. Department of Transportation, Title 49 CFR Part 394, and as amended.

REMOVED AND RESERVED

(Special Note: For definition of "accident," see 49 CFR §390.5. For accident record keeping requirements, see 49 CFR §390.15(b). For hazardous materials spill reporting requirements, see 49 CFR §171.15 and §171.16)

## Part 395

## Hours of Service of Drivers

**4-1-395 Motor Carrier Safety Regulations—Hours of Service of Drivers.**

Except as amended by the Commission herein, Rule 4-1-395 is contained in Federal Motor Carrier Safety Regulations issued by the Federal Motor Carrier Safety Administration, U.S. Department of Transportation, Title 49 CFR Part 395, and as amended.

**4-1-395.1(k)(3)** *Georgia planting and harvesting seasons*. Based on information provided by the Georgia Department of Agriculture, the Commission finds that the planting and harvesting seasons for Georgia cover 365 days each year.

## Part 396

## Inspection, Repair, and Maintenance

**4-1-396 Motor Carrier Safety Regulations—Inspection, Repair, and Maintenance**.

Except as amended by the Commission herein, balance of Rule 4-1-396 is contained in Federal Motor Carrier Safety Regulations issued by the Federal Motor Carrier Safety Administration, U.S. Department of Transportation, Title 49 CFR Part 396, and as amended.

**4-1-396.9 Inspection of motor vehicles in operation.**

(a) *Personnel authorized to perform inspections.* Every Law Enforcement Officer of the Commission or other persons designated by the Commission are authorized to stop, enter upon, and perform inspections of motor carrier's vehicles in operation; said personnel are further authorized to examine vehicles, including, but not limited to, cargo and compartments where cargo or equipment and supplies may be carried, driver's compartments and sleeper berths, and to examine documents normally carried onboard such vehicles, including but not limited to, driver qualification and training documents, driver's licenses, records of duty status, hours of service records, inspection reports, shipping documents, leases, permits, vehicle registrations, and insurance documents. This authority includes all stations, garages, offices, vehicles and their compartments, and all records kept or required to be kept.

(b) *Prescribed inspection report*. The Driver Vehicle Inspection Report shall be used to record results of motor vehicle inspections conducted by authorized personnel. In addition to or in place of written documents, inspections may be recorded in electronic form.

(c) *Motor vehicles, drivers, and cargo declared "out of service."*

(1) The Commission shall establish uniform "out of service" criteria for placing unsafe vehicles, drivers, and cargo out of service. An "out of service" sticker shall be used to mark vehicles out of service. Authorized personnel shall declare and mark "out of service" any motor vehicle which by reason of its mechanical conditions or loading would likely cause an accident or breakdown. Authorized personnel are further authorized to declare "out of service" any driver who violates or otherwise fails to comply with "out of service" criteria established pursuant to Parts 107, 130, 171-185, 382, 383 and 390-397.

(2) No motor carrier shall require or permit any person to operate any motor vehicle declared and marked "out of service" until all repairs required by the "out of service" notice have been satisfactorily completed. No driver declared "out of service" pursuant to criteria established under this section shall drive a motor vehicle, until the condition that caused the "out of service" action has been remedied and the conditions set forth in the "out of service" notice have been met. No cargo declared "out of service" pursuant to criteria established under this section shall be moved until the condition that caused the "out of service" action has been remedied and the conditions set forth in the "out of service" notice have been met. The term "operate" as used in this section shall include towing the vehicle, except that vehicles marked "out of service" may be towed away by means of a vehicle using a crane or hoist (commonly referred to as a wrecker). A vehicle combination consisting of an emergency towing vehicle and an "out of service" vehicle shall not be operated unless such combination meets the performance requirements of this subchapter except for those conditions noted on the

Driver Vehicle Inspection Report. Hazardous materials cargo declared "out of service" may be allowed to be moved to the nearest facility with equipment and personnel capable of handling such materials.

(3) No person shall remove the "out of service" vehicle sticker from any motor vehicle prior to completion of all repairs required by the "out of service" notice.

(4) Violations or defects noted on the Driver Vehicle Inspection Report which do not render the driver, vehicle, or cargo "out of service" shall be repaired or corrected as soon as possible, but in any case before the vehicle, driver, or cargo is dispatched on another trip.

(d) *Motor Carrier disposition.*

(1) The driver of any motor vehicle receiving an inspection report shall deliver it to the motor carrier operating the vehicle upon his or her arrival at the next terminal or facility. If the driver is not scheduled to arrive at a terminal or facility of the motor carrier operating the vehicle within 24 hours, the driver shall immediately mail the report to the motor carrier.

(2) Motor carriers shall examine the report. Violations or defects noted thereon shall be corrected.

(3) Within 15 days following the date of the inspection, the motor carrier shall—

(i) Certify that all violations noted have been corrected by completing the "Signature of Carrier Official" and "Date Signed" portions of the form;

(ii) When applicable, have the repairer complete the "Signature of Repairer," "Facility," and "Date" portions of the report; and

(iii) Return the completed inspection form to the Commission at the address indicated on the report.

(e) *Penalties.* Violation of an "out of service" order, or false, fraudulent, or misleading statements regarding correction of the driver, vehicle, or cargo defects may subject the driver, carrier, and repairer, to civil and criminal penalties as provided for by law.

## Part 397

## Transportation of Hazardous Materials; Driving and Parking Rules.

### 4-1-397 Motor Carrier Safety Regulations—Transportation of Hazardous Materials; Driving and Parking Rules.

Except as amended by the Commission herein, balance of Rule 4-1-397 is contained in Federal Motor Carrier Safety Regulations issued by the Federal Motor Carrier Safety Administration, U.S. Department of Transportation, Title 49 CFR Part 397, and as amended.

RESERVED (No Commission Amendments)

# TRANSPORTATION RULES
# OF
# GEORGIA PUBLIC SERVICE COMMISSION

## SUBCHAPTER 4-2: HAZARDOUS MATERIALS SAFETY

Table Of Contents


| | |
|---|---|
| **Part 4-2-1** | **Purpose and Applicability** |
| **Part 4-2-107** | **Hazardous Materials Program Procedures** |
| **Part 4-2-130** | **Oil Spill Prevention and Response Plans** |
| **Part 4-2-171** | **General Information, Regulations, and Definitions** |
| **Part 4-2-172** | **Hazardous Materials Table, etc.** |
| **Part 4-2-173** | **General Requirements for Shipments and Packaging** |
| **Part 4-2-177** | **Carriage by Highway** |
| **Part 4-2-178** | **Specifications for Packaging** |
| **Part 4-2-179** | **Specifications for Packaging** |
| **Part 4-2-180** | **Continuing Qualification and Maintenance of Packaging** |


### 4-2-1.1 Applicability.

(a) The hazardous materials rules and regulations of the Georgia Public Service Commission are the minimum requirements for all motor carriers operating both for hire and in private transportation in either interstate or intrastate commerce in Georgia, and to the extent that they do not conflict with Georgia law; and where applicable, are the same as the Hazardous Materials Regulations issued by the U.S. Department of Transportation, Research and Special Programs Administration, contained in Title 49 of the Code of Federal Regulations, Subtitle B, Chapter I, Subchapters A, B, and C, Parts 107, 130, 171-173, and 178 through 180 (and as amended) (See Individual Rule Pages and Notes).

(b) Any reference in the regulations to the "Associate Administrator" shall be interpreted to mean Director, Transportation Division, Georgia Public Service Commission, except insofar as the term relates to—

(1) packaging design, construction, manufacture; or

(2) the issuance of exemptions from this chapter; or

(3) authorizations issued under this chapter; or

(4) preemption.

(c) All references to "interstate" commerce shall be interpreted to include "intrastate" commerce. It is the intent of the Commission that the regulations shall apply to intrastate carriers and their operations.

(d) Where the Federal regulations as adopted by the Commission refer to "carriers" or "motor carriers," the term shall mean ***all*** for hire and private motor carriers subject to the Commission's jurisdiction pursuant to Title 46 O.C.G.A.

**NOTE: Copies of the U.S. Department of Transportation's Hazardous Materials Regulations may be obtained from the U.S. Government Printing Office, Superintendent of Documents, Washington, DC 20402.**

**4-2-1.2 Reports.**

(a) All reports required by the hazardous materials regulations shall be sent to the Georgia Public Service Commission, Transportation Division, 1007 Virginia Avenue, Suite 310, Hapeville, Georgia 30354-1325, in addition to any copies required to be sent to any Federal Agency.

(b) The Georgia Public Service Commission will accept forms prescribed by the U.S. Department of Transportation where required by the hazardous materials regulations.

**4-2-1.3 Hazardous Materials Permits.**

(a) See Chapter 9 for rules governing permits for the transportation of radioactive materials, liquefied natural gas, and polychlorinated biphenyl.

**4-2-1.4 Penalties.**

(a) *Criminal penalty.* In addition to any other penalty imposed by law, violations of any provision of this chapter shall constitute a misdemeanor, pursuant to O.C.G.A.§46-2-93 and §46-7-39.

(b) *Civil penalty.* In addition to any other penalty imposed by law, violations of this chapter shall be subject to the provisions of O.C.G.A. §46-2-91.

**4-2-1.5 Construction.**

(a) Unless amended by the Commission herein, the rules in this chapter numbered beyond 4-2-100 shall generally be the same as the rules contained in the Federal Hazardous Materials Regulations. Where reference is made to a federal rule number (e.g., "171.9") the compatible state rule shall be deemed to be "4-2-" followed by the Federal rule number (e.g., "49 CFR §171.9" becomes "4-2-171.9").

(b) References on Commission documents to a Federal rule by Federal Section number shall be construed as a valid cite of the Commission's rules and regulations without listing the entire Commission section reference (e.g., "171.8" equals "4-2-171.8").

## Part 107

## Hazardous Materials Program Procedures

**4-2-107 Hazardous materials program procedures.**

Except as amended by the Commission herein, the balance of Rule 4-2-107 is contained in Federal Hazardous Materials Regulations issued by the Research and Special Programs Administration, U.S. Department of Transportation, Title 49 CFR Part 107, and as amended.

**4-2-107.1(g) & (h) Purpose and scope.**

(g) Insofar as this part contains regulations which apply to the transportation of hazardous materials by motor vehicle, the Commission adopts them for purposes of enforcement and consistency with federal law and regulations.

(h) Where this subchapter makes references to the "Associate Administrator for Hazardous Materials Safety," said term shall mean the Director, Transportation Division, Georgia Public Service Commission, except insofar as the term relates to—

(1) packaging design, construction, manufacture; or

(2) the issuance of exemptions from this chapter; or

(3) authorizations issued under this chapter; or

(4) preemption.

## Part 130

## Oil Spill Prevention and Response Plans

### 4-2-130 Oil Spill Prevention and Response Plans

Except as amended by the Commission herein, the balance of Rule 4-2-130 is contained in Federal Hazardous Materials Regulations issued by the Research and Special Programs Administration, U.S. Department of Transportation, Title 49 CFR Part 130, and as amended.

### 4-2-130.1 Purpose.

This part prescribes prevention, containment, and response planning requirements of the Georgia Public Service Commission applicable to transportation of oil by motor vehicle.

## Part 171

## General Information, Regulations, and Definitions

**4-2-171 General Information, Regulations, and Definitions.**

Except as amended by the Commission herein, the balance of Rule 4-2-171 is contained in Federal Hazardous Materials Regulations issued by the Research and Special Programs Administration, U.S. Department of Transportation, in Title 49 CFR Part 171, and as amended.

**4-2-171.1(a) - (c), & (g) - (h) Purpose and scope.**

(a) This subchapter prescribes the requirements of the Georgia Public Service Commission governing—

(1) The offering of hazardous materials for transportation and transportation of hazardous materials in interstate, intrastate, and foreign commerce by motor vehicle.

(2) The representation that a hazardous material is present in a package, container, or motor vehicle.

(3) The manufacture, fabrication, marking, maintenance, reconditioning, repairing, or testing of a packaging or container which is represented, marked, certified, or sold for use in transportation of hazardous materials.

(4) The use of terms and symbols prescribed in this subchapter for the marking, labeling, placarding, and description of hazardous materials and packaging used in their transport.

(b) Any person who, under contract with any department, agency, or instrumentality of the executive, legislative, or judicial branch of the Federal Government, transports, or causes to be transported or shipped, a hazardous material or manufactures, fabricates, marks, maintains, reconditions, repairs, or tests a package or container which is represented, marked, certified, or sold by such person as qualified for use in the transportation of a hazardous material shall be subject to and comply with all provisions of the Federal hazardous materials transportation law, all orders and regulations issued thereunder, and all other substantive and procedural requirements of Federal, State, and local governments and Indian tribes (except any such requirements that have been preempted by the Federal hazardous materials transportation law or any other Federal law), in the same manner and to the same extent as any person engaged in such activities that are in or affect commerce is subject to such provisions, orders, regulations, and requirements.

(c) Any person who knowingly violates a requirement of Commission hazardous material rules, an order issued thereunder, any order, rule, or exemption requirement, shall be subject to criminal and civil penalties as provided for by law, in addition to any penalties which may be imposed by the Federal Hazardous Materials Law or Regulations.

(g) The regulations of this subchapter pertaining to prohibited or restricted practices shall apply to all persons, motor vehicles, packaging, and freight containers subject to the jurisdiction of the Commission; those prohibited practices shall include, but not be limited to, misrepresentation of placarding, marking, labeling, and specifications.

(h) Where this subchapter makes references to the "Associate Administrator for Hazardous Materials Safety," said term shall mean the Director, Transportation Division, Georgia Public Service Commission, except insofar as the term relates to—

(1) packaging design, construction, manufacture; or

(2) the issuance of exemptions from this chapter; or
(3) authorizations issued under this chapter; or
(4) preemption.

**4-2-171.8 Definitions.**

Balance of §171.8 definitions, except as amended herein, are contained in the Federal Hazardous Materials Regulations issued by the Research and Special Programs Administration, U.S. Department of Transportation, contained in Title 49 CFR §171.8. The following definitions are inserted in 49 CFR §171.8 in the appropriate alphabetical order:

*Private motor carrier of property* - (See Commission Transportation Rule 4-1-390.5)
*Road-building material* - (See Commission Transportation Rule 3-1.5)

## Part 172

## Hazardous Materials Table, Special Provisions, Hazardous Materials Communications, Emergency Response Information, and Training Requirements

**4-2-172 Hazardous Materials Table, Special Provisions, Hazardous Materials Communications, Emergency Response Information, and Training Requirements.**

Except as amended by the Commission herein, the balance of Rule 4-2-172 is contained in Federal Hazardous Materials Regulations issued by the Research and Special Programs Administration, U.S. Department of Transportation, Title 49 CFR Part 172, and as amended.

RESERVED (No Commission Amendments)

## Part 173

## General Requirements for Shipments and Packaging

**4-2-173 General Requirements for Shipments and Packaging.**

Except as amended by the Commission herein, the balance of Rule 4-2-173 is contained in Federal Hazardous Materials Regulations issued by the Research and Special Programs Administration, U.S. Department of Transportation, Title 49 CFR Part 173, and as amended.

**4-2-173.5-1 Georgia intrastate agricultural operations.**

(a) Subject to the conditions and limitations set forth in 49 CFR §173.5, and to the extent allowed by Law, the Georgia Public Service Commission Hazardous Materials Regulations specifically authorize the transportation of "agricultural products" (as defined in 49 CFR §171.8). (**NOTE:** Originally adopted as part of Appendix "A" File MCA 1-3, Docket No. 16632-M, Effective June 1, 1998)

**4-2-173.8-1 Georgia exceptions for non-specification packaging used in intrastate commerce.**

(a) *Cargo tanks.* Subject to the conditions and limitations set forth in 49 CFR §173.8, Georgia Public Service Commission Hazardous Materials Regulations specifically authorize the transportation of Class 3 (flammable liquid) petroleum products in intrastate commerce in non-specification cargo tanks less than 3,500 gallons capacity.

(b) *Non-bulk tanks.* Subject to the conditions and limitations set forth in 49 CFR §173.8, Georgia Public Service Commission Hazardous Materials Regulations specifically authorize the transportation of Class 3 (flammable liquid) petroleum products in intrastate commerce in non-specification non-bulk tanks permanently mounted to motor vehicles.

(c) *Utility tanks.* Utility fuel tanks, which were previously authorized by Commission Hazardous Materials Rule §173.119(a)(17), must comply with these regulations by the dates specified in 49 CFR §173.8(d). (**NOTE:** Originally adopted as part of Appendix "A" File MCA 1-3, Docket No. 16632-M, Effective June 1, 1998.)

## Part 177

## Carriage by Highway

**4-2-177 Carriage by Highway.**

Except as amended by the Commission herein, the balance of Rule 4-2-177 is contained in Federal Hazardous Materials Regulations issued by the Research and Special Programs Administration, U.S. Department of Transportation, Title 49 CFR Part 177, and as amended.

**4-2-177.802 Inspection.**

Records, equipment, packagings and containers under the control of a motor carrier, insofar as they affect safety in transportation of hazardous materials by motor vehicle, must be made available for examination and inspection by a duly authorized representative of the Commission.

## Part 178

## Specifications for Packaging

**4-2-178 Specifications for Packaging.**

Except as amended by the Commission herein, the balance of Rule 4-2-178 is contained in Federal Hazardous Materials Regulations issued by the Research and Special Programs Administration, U.S. Department of Transportation, contained in Title 49 CFR Part 178, and as amended.

RESERVED (No Commission Amendments)

## Part 179

## Specifications for Packaging

**4-2-179 Specifications for Packaging.**

Except as amended by the Commission herein, the balance of Rule 4-2-179 is contained in Federal Hazardous Materials Regulations issued by the Research and Special Programs Administration, U.S. Department of Transportation, Title 49 CFR Part 179, and as amended.

RESERVED (No Commission Amendments)

## Part 180

## Continuing Qualification and Maintenance of Packaging

### 4-2-180 Continuing Qualification and Maintenance of Packaging

Except as amended by the Commission herein, the balance of Rule 4-2-180 is contained in Federal Hazardous Materials Regulations issued by the Research and Special Programs Administration, U.S. Department of Transportation, contained in Title 49 CFR Part 180, and as amended.

RESERVED (No Commission Amendments)

# TRANSPORTATION RULES
# OF
# GEORGIA PUBLIC SERVICE COMMISSION

## SUBCHAPTER 4-3: GEORGIA FOREST PRODUCTS TRUCKING RULES

Table Of Contents


| | | | |
|---|---|---|---|
| **Part 4-3-1** | **Purpose and Applicability** | **Part 4-3-392** | **Driving of Motor Vehicles** |
| **Part 4-3-382** | **Controlled Substance and Alcohol Use and Testing** | **Part 4-3-393** | **Parts and Accessories Necessary for Safe Operation** |
| **Part 4-3-383** | **Commercial Driver's License Standards** | **Part 4-3-394** | **Removed and Reserved** |
| **Part 4-3-390** | **General** | **Part 4-3-395** | **Hours of Service of Drivers** |
| **Part 4-3-391** | **Qualifications of Drivers** | **Part 4-3-396** | **Inspection, Repair and Maintenance** |


### 4-3-1.1 Background.

The Georgia Forest Products Trucking Rules are the minimum safety and operational rules promulgated by the Georgia Public Service Commission for certain commercial motor vehicle operations engaged in the transportation of unmanufactured forest products. Prior to July 1, 1991, certain vehicles transporting these commodities were not subject to the jurisdiction of the Commission.

### 4-3-1.2 Purpose and Applicability.

(a) *Intrastate Transportation.*

(1) Persons engaged solely in the intrastate transportation of logs, pulpwood, untreated posts or poles, pine straw, or stumps, whether operating as a for hire or private carrier, must comply with the rules in this subchapter (The Georgia Forest Products Trucking Rules).

(2) Persons engaged in the for hire transportation of wood chips, shavings, bark, saw dust, machined posts or poles, saw mill waste or other processed forest products must comply with the Commission's motor carrier safety rules found in Subchapter 4-1, and are not subject to the Georgia Forest Products Trucking Rules. Furthermore, such persons must obtain a Property Permit from the Commission as provided for in Chapter 6 of the Commission's rules.

(3) Persons engaged in the intrastate transportation of unmanufactured forest products in private transportation must comply with the Georgia Forest Products Trucking Rules.

(b) *Interstate Transportation.* Persons engaged in the interstate transportation of all property, including but not limited to forest products (both processed and unmanufactured), whether operating as a for hire or private carrier, are subject to the Federal Motor Carrier Safety Regulations. The Commission has adopted the Federal Motor Carrier Safety Regulations (see subchapter 4-1 of the Commission's rules). Accordingly, such operations are not subject to the Georgia Forest Products Trucking Rules.

(c) All references to the U.S. Department of Transportation except when used to designate approval of mechanical specifications shall be interpreted to mean the Georgia Public Service Commission.

(d) Any reference in the regulations to the "Administrator, Federal Motor Carrier Safety Administration" shall be interpreted to mean Director, Transportation Division, Georgia Public Service Commission, except insofar as the term relates to—

(1) the issuance of exemptions from this chapter;
(2) the issuance of medical waivers; or
(3) preemption.

(e) All references to "interstate" commerce found in the Federal Motor Carrier Safety Regulations shall be interpreted to include "intrastate" commerce. It is the intent of the Commission that the regulations shall apply to intrastate carriers and their operations.

**Note: Copies of the U.S. Department of Transportation's Motor Carrier Safety Regulations may be obtained from the U.S. Government Printing Office, Superintendent of Documents, Washington, DC 20402.**

**4-3-1.3 Reports.**

(a) All reports required by the safety regulations shall be sent to the Georgia Public Service Commission, Transportation Division, 1007 Virginia Avenue, Suite 310, Hapeville, Georgia 30354-1325, in addition to any copies required to be sent to any Federal Agency.

(b) The Georgia Public Service Commission will accept forms prescribed by the U.S. Department of Transportation where required by the safety regulations.

**4-3-1.4 Penalties.**

(a) *Criminal penalty.* In addition to any other penalty imposed by law, violations of any provision of this chapter shall constitute a misdemeanor, pursuant to O.C.G.A.§46-2-93 and §46-7-39.

(b) *Civil penalty.* In addition to any other penalty imposed by law, violations of this chapter shall be subject to the provisions of O.C.G.A. §46-2-91.

**4-3-1.5 Construction.**

(a) Unless amended herein, the rules in this chapter numbered beyond 4-3-300 shall generally be the same as the rules contained in the Federal Motor Carrier Safety Regulations. Where reference is made to a federal rule number (e.g., "390.5") the compatible state rule shall be deemed to be "4-3-" followed by the Federal rule number (e.g., "49 CFR §390.5" becomes "4-3-390.5").

(b) References on Commission documents to a Federal rule by Federal Section number shall be construed as a valid cite of the Commission's rules and regulations without listing the entire Commission section reference (e.g., "390.5" equals "4-3-390.5").

## Part 382

## Controlled Substances and Alcohol Use and Testing
(For Unmanufactured Forest Products)
(See Notes)

**4-3-382 Controlled Substances and Alcohol Use and Testing**.

Except as amended herein, the balance of Rule 4-3-382 is contained in Controlled Substance and Alcohol Use and Testing Regulations issued by the Federal Motor Carrier Safety Administration, U.S. Department of Transportation, Title 49 CFR Part 382, and as amended.

No Amendments

**NOTE: The rules in Part 382 apply as a result of Congressional and Federal action, the State of Georgia lacks discretion in this area.**

**NOTE: Balance of Part 382, except as amended herein, is contained in Commission's Motor Carrier Safety Regulations issued under Subchapter 4-1.**

## Part 383

## Commercial Driver's License Standards
(For Unmanufactured Forest Products)
(See Notes)

**4-3-383 Motor Carrier Safety Regulations—Commercial Drivers License Standards**.

Except as amended herein, the balance of Rule 4-3-383 is contained in Commercial Driver's License Regulations issued by the Federal Motor Carrier Safety Administration, U.S. Department of Transportation, contained in Title 49 CFR Part 383, and as amended.

No Amendments

**NOTE: The rules in Part 383 apply as a result of Congressional and Federal action, the State of Georgia lacks discretion in this area.**

**NOTE: Balance of Part 383, except as amended herein, is contained in Commission's Motor Carrier Safety Regulations issued under Subchapter 4-1.**

## Part 390

## Motor Carrier Safety Regulations—General

(For unmanufactured Forest Products)

**4-3-390 Motor Carrier Safety Regulations—General**.

Except as amended herein, balance of Rule 4-3-390 is contained in the Motor Carrier Safety Regulations of the Georgia Public Service Commission contained in Rule 4-1-390.

**4-3-390.3 General applicability.**

(g) The applicability of the rules in subchapter B of this chapter (the Forest Products Trucking Rules) are provided for in Rule 4-3-1.2 and includes all employers, employees, and commercial motor vehicles of persons described in said rule. EXCEPTION: Paragraph (c) of this section (relating to financial responsibility requirements of 49 CFR Part 387) does not apply to commercial motor vehicles which transport unmanufactured forest products solely in intrastate commerce. The carriers, drivers and vehicles subject to the Georgia Forest Products Trucking Rules are not required to comply with the following rules or regulations:

(1) §390.27 (relating to federal motor carrier office locations) EXCEPTION: §§390.31 & 390.35 apply only to the extent as they relate to controlled substances and alcohol testing, commercial drivers license, annual driving record inquiry, medical examination, and maintenance and inspection records.

(2) §391.11(b)(1)(relating to age), (b)(2) (relating to language ability), (b)(6) (relating to list of violations), (b)(8) (relating to road test), §391.21 (relating to application for employment), §391.23(a)(2) and §391.23(c) (relating to investigations and inquiries), §391.27 (relating to record of violations), §391.31, §391.33 (both relating to road test), §391.61 (relating to driver qualification files before 1/1/71), §391.63 (relating to multiple employer drivers), §391.65 (relating to drivers furnished by other motor carriers), and §391.67 (relating to certain types of motor vehicle drivers)

(3) §§392.62, and 392.63 (relating to towing of buses);

(4) Definitions for: *"Agricultural commodity trailer," "Bus," "Container chassis," "Converter dolly," "Curb weight," "License plate lamp"* found in §393.5; §§393.44, 393.63 (both relating to buses), 393.88 (relating to television receivers), 393.89, 393.90, 393.91, 393.92, 393.93(a)(1)(2)(3) (all relating to buses), and 393.94 (relating to interior noise levels);

(5) All of Part 395 - Hours of Service of Drivers; and

(6) §§396.3(a)(2) (relating to bus windows), 396.11, 396.13, 396.15, (all relating to daily inspection reports).

**4-3-390.5 Definitions.**

Balance of § 390.5 definitions, except as amended herein, are contained in Commission Rule 4-1-390.5. The following definitions are hereby inserted in the appropriate alphabetical order:

In this Subchapter:

*Commercial motor vehicle* means any self-propelled or towed vehicle used on public highways in intrastate commerce to transport passengers or property when: the vehicle has a gross vehicle weight rating of 44,000 pounds or more and is engaged solely in the intrastate transportation of unmanufactured forest products.

*Unmanufactured Forest Products* means unmachined logs, unmachined posts, pulpwood, wood chips, bark, saw-mill waste, stumps and pine-straw.

**§390.21(a) - (e) and (j) - (k) Marking of commercial motor vehicles and motor carrier identification numbers.**

(a) *General*. Except as otherwise provided, every self propelled commercial motor vehicle operated in interstate or intrastate commerce and subject to the Commission Transportation Rules in Subchapters 4-1, 4-2, and 4-3, must be marked as specified in paragraphs (b), (c) and (d) of this section. Self propelled commercial motor vehicles operated by for hire motor carriers under authority issued by the Interstate Commerce Commission (ICC) or Federal Motor Carrier Safety Administration (FMCSA) may meet the requirements of this section by complying with the marking requirements set forth in 49CFR Part 390 Subpart D.

(b) *Nature of marking*. The marking must display the following information:

(1) The name or trade name of the motor carrier operating the self propelled commercial motor vehicle.

(2) The city or community and State (name abbreviated), in which the carrier maintains its principal place of business or in which the commercial motor vehicle is customarily based.

(3) The motor carrier identification number, if issued by the FMCSA or the Commission, preceded by the letters “USDOT” (Example: USDOT 000000).

(4) If the carrier is engaged solely in intrastate transportation, the motor carrier identification number preceded by the letters “USDOT” and followed by the letters “GA” (Example: USDOT 000000 GA). A solely intrastate motor carrier shall affix to all self-propelled motor vehicles the motor carrier identification number described herein within 30 days of obtaining said number.

(5) If the name of any person other than the operating carrier appears on the commercial motor vehicle operated under its own power, either alone or in combination, the name of the operating carrier shall be followed by the information required by paragraphs (b)(1), (2), and (3) of this section, and be preceded by the words “operated by”.

(6) Other identifying information may be displayed on the commercial motor vehicle if it is not inconsistent with the information required by this paragraph.

(c) *Size, shape, location, and color of marking*. The marking must —

(1) Appear on both sides of the self-propelled commercial motor vehicle;

(2) Be in letters that contrast sharply in color with the background on which the letters are placed;

(3) Be readily legible, during daylight hours, from a distance of 50 feet while the commercial motor vehicle is stationary; and

(4) Be kept and maintained in a manner that retains the legibility required by paragraph (c)(3) of this section.

(d) *Construction and durability.* The marking may be painted on the commercial motor vehicle or may consist of a removable device, if that device meets the identification and legibility requirements of this section, and such marking shall be maintained in such a manner as to remain legible as required by this section.

(e) *Rented commercial motor vehicles*. A motor carrier operating a self propelled commercial motor vehicle under a rental agreement having a term not in excess of 30 calendar days may meet the requirements of this section in either one of two ways:

(1) The commercial motor vehicle is marked in accordance with the provisions of paragraphs (b) through (d) of this section; or

(2) The commercial motor vehicle is marked as set forth below:

(i) The name or trade name of the lessor is displayed in accordance with paragraphs (c) and (d) of this section;

(ii) The city or community and State (name abbreviated), in which the lessor maintains its principal place of business or in which the commercial motor vehicle is customarily based is displayed in accordance with paragraphs (c) and (d) of this section;

(iii) The lessor's identification number, issued by the FMCSA, preceded by the letters "USDOT" is displayed in accordance with paragraphs (c) and (d) of this section; and

(iv) The rental agreement entered into by the lessor and the renting motor carrier conspicuously contains the following information:

(A) The name and complete physical address of the principal place of business of the renting motor carrier;

(B) The identification number issued the renting motor carrier by the FMCSA, preceded by the letters "USDOT," if the motor carrier has been issued such a number. In lieu of the identification number required in this paragraph, the following may be shown:

(1) Information which will indicate if the motor carrier is engaged in "interstate" or "intrastate" commerce; and

(2) Information which will indicate if the renting motor carrier is transporting hazardous materials in the rented commercial motor vehicle;

(C) The sentence: "This lessor cooperates with all federal, state, and local law enforcement officials nationwide to provide the identity of customers who operate this rental commercial motor vehicle;" and

(v) The rental agreement entered into by the lessor and the renting motor carrier is carried on the rental commercial motor vehicle during the full term of the rental agreement.

(3) All rented and leased vehicles shall carry a legible copy of the current lease or rental agreement for the entire duration of the rental or lease term.

(j) *Motor carrier identification report*.

(1) All motor carriers currently conducting operations solely in intrastate commerce shall file with the Commission a Motor Carrier Identification Report (Form PSC MCS–150 GA), and obtain a motor carrier identification number. Exception: The provisions of this paragraph do not apply to a motor carrier that:

(i) Also engages in interstate or foreign commerce, and

(ii) Has filed an MCS–150 with the FMCSA, or

(iii) Has received written notification of a safety rating from FMCSA.

(2) All motor carriers beginning operation after the effective date of this rule shall file the Motor Carrier Identification Report (Form PSC MCS–150 GA), within 90 days after beginning operations.

(3) The Motor Carrier Identification Report, Form PSC MCS–150 GA, is available from the Georgia Public Service Commission, P.O. Box 82352, Hapeville, Georgia 30354, or by calling (404)559-6611. A copy may also be downloaded from the Commission's website at http://www.psc.state.ga.us/

(4) The completed Motor Carrier Identification Report (Form PSC MCS–150 GA) shall be filed in one of the following ways:

(i) By mail: Georgia Public Service Commission, P.O. Box 82352, Hapeville, Georgia 30354, or

(ii) By facsimile: (404)669-3324, or

(iii) In person: Georgia Public Service Commission, 1007 Virginia Avenue, Suite 310, Hapeville, Georgia 30354.

(5) A carrier which engages solely in intrastate commerce and subsequently begins interstate operations shall comply with the provisions of Title 49 CFR §385.21, and shall submit a copy of the FMCSA MCS–150 to the Commission in one of the manners listed above.

(k) *Failure to report*. Failure by a motor carrier to file a Motor Carrier Identification Report, Form PSC MCS–150 GA, pursuant to the provisions of this section, or furnishing misleading information or making false statements upon the PSC MCS–150 GA shall subject the offender to civil and/or criminal penalties as provided for by law.

**NOTE: Balance of Part 390, except as amended herein, is contained in Commission's Motor Carrier Safety Regulations issued under Subchapter 4-1.**

## Part 391

## Qualifications Of Drivers
(For Unmanufactured Forest Products)
(See Notes)

**4-3-391 Motor Carrier Safety Regulations—Qualifications of Drivers.**

Except as amended herein, Balance of Rule 4-3-391, is contained in the Motor Carrier Safety Regulations of the Georgia Public Service Commission contained in Rule 4-1-391.

**4-3-391.51 Driver Records.**

(a) Every employer shall maintain driver records for each driver it employs. The records shall include at least the following information:

(1) A current copy of the driver's commercial drivers license;

(2) A copy of the response of each State agency to the driver record inquiry required by §391.23(a)(1), and §391.25;

(3) The medical examiner's certificate of his or her physical qualification to drive a commercial motor vehicle or a legible photographic copy of the certificate; and

(4) The letter granting a waiver of a physical disqualification, if a waiver has been issued under section 391.49.

Note: The following rules do not apply to vehicles engaged in the intrastate transportation of unmanufactured forest products (as defined in §390.5 of this rule):
§391.11(b)(1)(relating to age),
§391.11(b)(2) (relating to language ability),
§391.11(b)(6) (relating to list of violations),
§391.11(b)(8) (relating to road test),
§391.21 (relating to application for employment),
§391.23(a)(2) and §391.23(c) (relating to investigations and inquires),
§391.27 (relating to records of violations),
§391.31 and §391.33 (both relating to road test),
§391.61 (relating to driver qualification files before 1/1/71),
§391.63 (relating to multiple employer drivers),
§391.65 (relating to drivers furnished by other motor carriers), and
§391.67 (relating to certain types of motor vehicle drivers)

**NOTE: Balance of Part 391, except as amended herein, is contained in Commission's Motor Carrier Safety Regulations issued under Subchapter 4-1.**

## Part 392

## Driving Of Motor Vehicles
(For Unmanufactured Forest Products)
(See Note)

**4-3-392 Motor Carrier Safety Regulations—Driving of Motor Vehicles.**

Except as amended herein, Balance of Rule 4-3-392, is contained in the Motor Carrier Safety Regulations of the Georgia Public Service Commission contained in Rule 4-1-392.

Note: The following rules do not apply to vehicles engaged in the intrastate transportation of unmanufactured forest products (as defined in §390.5 of this rule):

§392.62 (relating to buses); and
§392.63 (relating to towing of buses).

**NOTE: Balance of Part 392, except as amended herein, is contained in Commission's Motor Carrier Safety Regulations issued under Subchapter 4-1.**

## Part 393

## Motor Carrier Safety Regulations - Parts And Accessories Necessary For Safe Operation

(For Unmanufactured Forest Products)
(See Notes)

### 4-3-393 Motor Carrier Safety Regulations—Parts and Accessories Necessary for Safe Operation.

Except as amended herein, Balance of Rule 4-3-393, is contained in the Motor Carrier Safety Regulations of the Georgia Public Service Commission contained in Rule 4-1-393.

## Subpart B - Lighting Devices, Reflectors, and Electrical Equipment.

### 4-3-393.11 Lighting devices and reflectors.

Every commercial motor vehicle shall be equipped with operable and serviceable lamps and reflectors of the types and in the quantities as specified in the following illustrations. The locations of the lamps and reflectors shall be as close as reasonably practical to the locations specified in the following illustrations:

Illustration 1: Truck-Tractors
Illustration 2: Straight Trucks or Truck-Tractors
Illustration 3: Truck-Tractors
Illustration 4: Straight Trucks
Illustration 5: Straight Trucks
Illustration 6: Chip Trailers
Illustration 7: Chip Trailers
Illustration 8: Chip Trailers
Illustration 9: Flatbeds, Log Trailers, and Loader Trailers
Illustration 10: Loaded Log Trailers (including extended loads)
Illustration 11: Loaded Log Trailers (Including extended loads)

NOTE:
1. The Reflectors may be combined with the Side Marker Lamp lens, provided the lenses are constructed of reflective material.

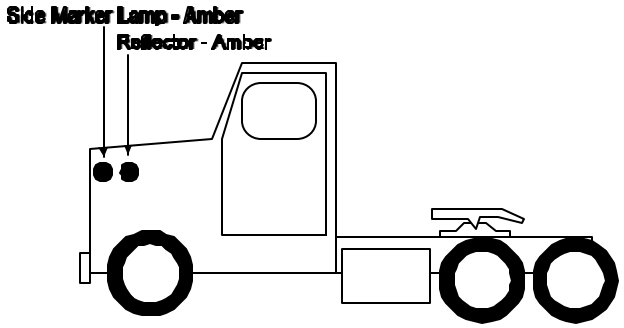


**Side View: Truck-Tractor**

Illustration # 1

---

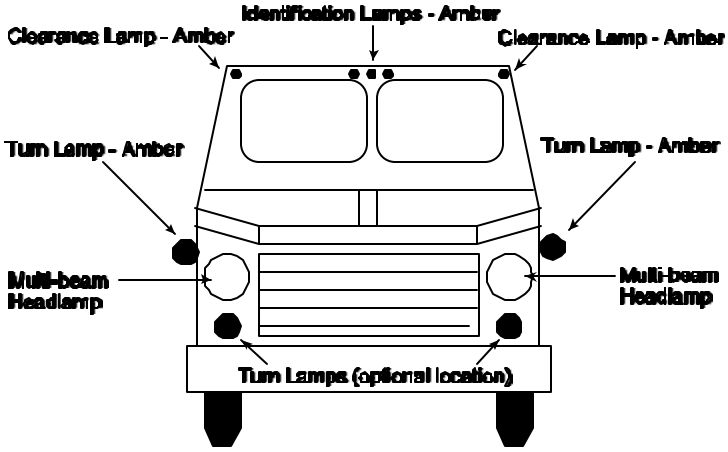


**Front View: Truck or Truck-Tractor**

Illustration # 2

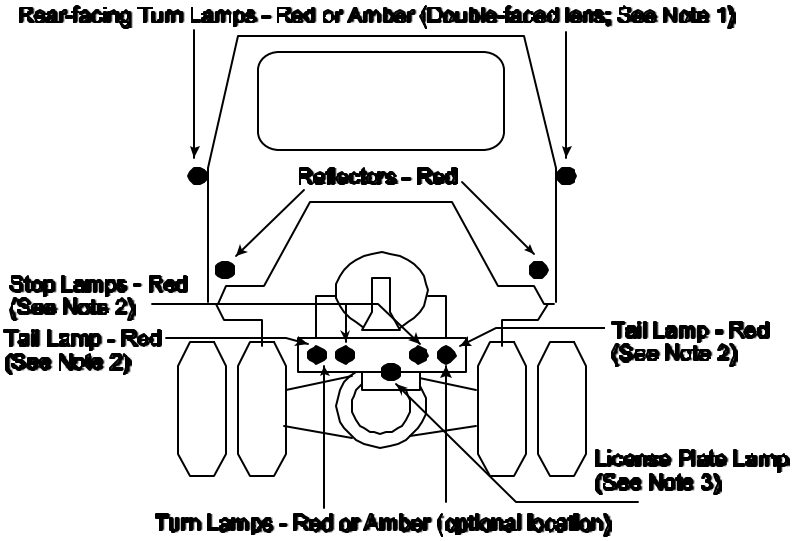


**Rear View: Truck-Tractor**

NOTES:

1. The use of double-faced Turn Lamps is authorized to meet the requirements for both front and rear, provided the Lamps are visible from the front and rear of the vehicle.

2. Lower mounted Stop, Tail, and Turn Lamps may be combined into one lamp housing using a multi-filament type bulb; the Stop and Turn functions must be brighter than the Tail Lamp Function (See §393.22).

3. A License Plate Lamp is not required if the License Plate is mounted on the front of the vehicle.

Illustration # 3

---

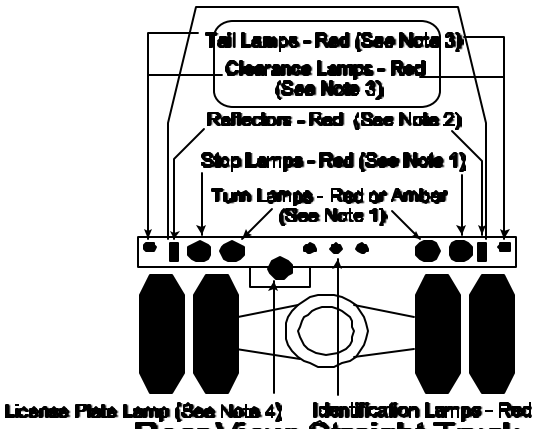


**Rear View: Straight Truck**

NOTES:

1. Stop, Tail, and Turn Lamps may be combined into one housing using a multi-filament type bulb; the Stop and Turn functions must be brighter than the Tail lamp (See §393.22).

2. The reflectors may be combined with a Stop, Tail, Turn, or Clearance Lamp, provided the lens is constructed of a reflective material.

3. Clearance lamps or the Tail Lamps must be positioned so as to indicate the extreme width of the vehicle; Clearance Lamps are not required if the Tail Lamps also accomplish this purpose.

4. A Projecting Load Lamp shall be required if the load extends four feet (4') or more beyond the rear-most part of the body or frame.

5. The lighting configuration of this illustration applies to all straight pulpwood trucks, straight log trucks, self-propelled loaders, and straight forestry trucks with a Gross Vehicle Weight Rating of 44,000 pounds or more.

Illustration #4

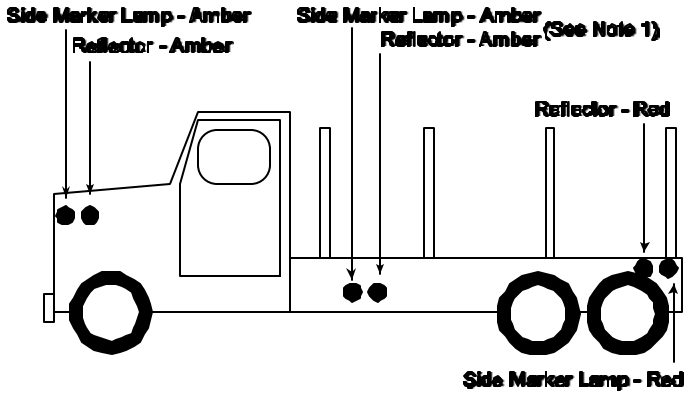


**Side View: Straight Truck**

NOTES:
1. Side Marker Lamps and Side Reflectors at or near the center are required only if the overall vehicle length exceeds 30 feet.

2. Reflectors may be combined with Side Marker Lamp lens, provided the lenses are constructed of reflective material.

3. The lighting configuration of this illustration applies to all straight pulpwood trucks, straight log trucks, self-propelled loaders, and straight forestry service trucks with a Gross Vehicle Weight Rating (GVWR) of 44,000 pounds or more.

4. A Projecting Load Lamp shall be required if the load or loader body extends four feet or more beyond the rear-most part of the body or frame.

Illustration # 5

---

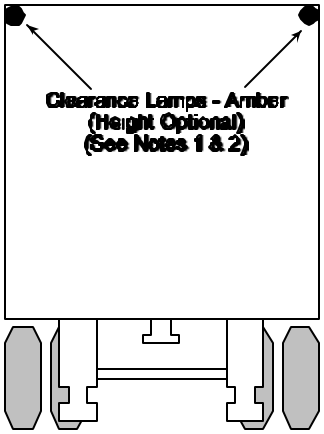


**Front View: Chip Trailer**

NOTES:
1. Clearance Lamps may be positioned either at the top or bottom of the trailer body.

2. Front Clearance Lamps may be combined with Side Marker Lamps if lamps are mounted on angular corners and are visible from both the front and side of the trailer.

Illustration # 6

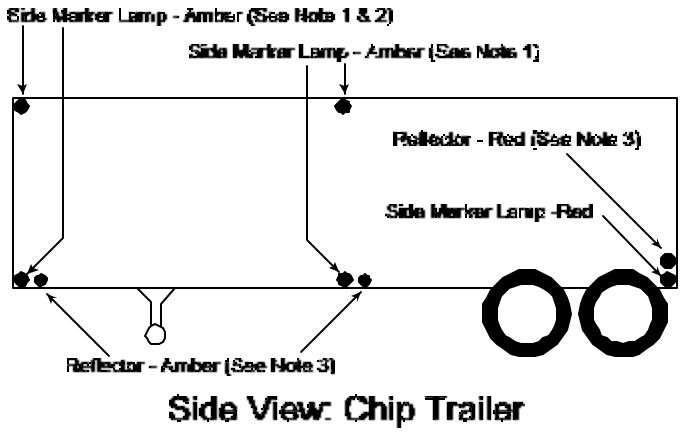


NOTES:
1. Front and Center Side Marker Lamps may be placed at either the top or bottom of the trailer body.

2. Front Side Marker Lamps may be combined with Clearance Lamps if lamps are mounted on angular corners and are visible from both the front and side of the trailer.

3. Reflectors may be combined with lower mounted Side Marker Lamp lenses, provided the lenses are constructed of a reflective material.

Illustration # 7

---

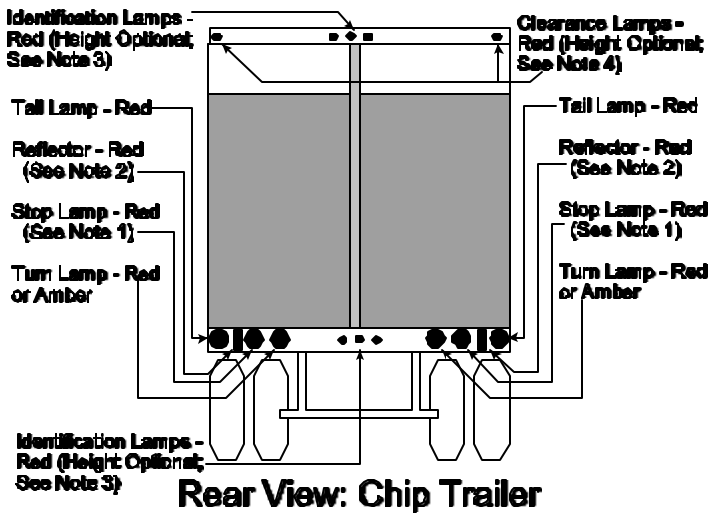


NOTES:
1. Stop, Tail, and Turn Lamps may be combined into one housing using a multi-filament type bulb; the Stop and Turn functions must be brighter than the Tail lamp (See §393.22).

2. The Red Reflectors may be combined with a Stop, Tail, Turn, or Clearance Lamp, provided the lenses are constructed of a reflective material.

3. Identification Lamps may be positioned at either the top or bottom of the trailer body.

4. Clearance lamps may be positioned at either the top or bottom of the trailer body. Clearance Lamps are not required if the Tail Lamps are positioned to indicate the extreme width of the body.

Illustration # 8

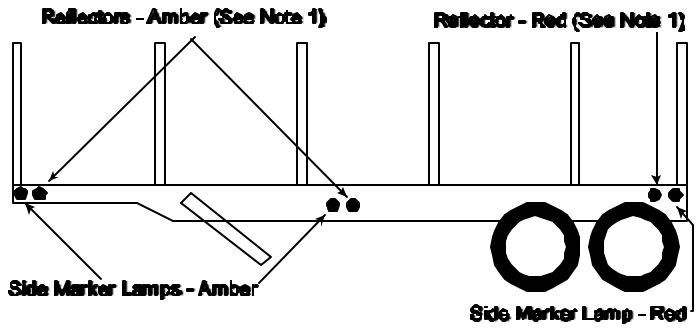


**Side View: Log Trailer, Flatbed, Loader, etc.**

NOTES:
1. Reflectors may be combined with side marker lamp lenses, provided the lenses are constructed of reflective material.

2. The sides of flat-bed, low-boy, and loader-type trailers shall be equipped with the same type, number, and location of lighting and reflectors as indicated in this illustration. Any load which extends beyond the rear-most part of the body or frame by four feet (4') or more shall also be required to display a Projecting Load Lamp as described in §393.11PL.

3. Center side reflectors must be not less than 4 inches in diameter.

Illustration # 9

---

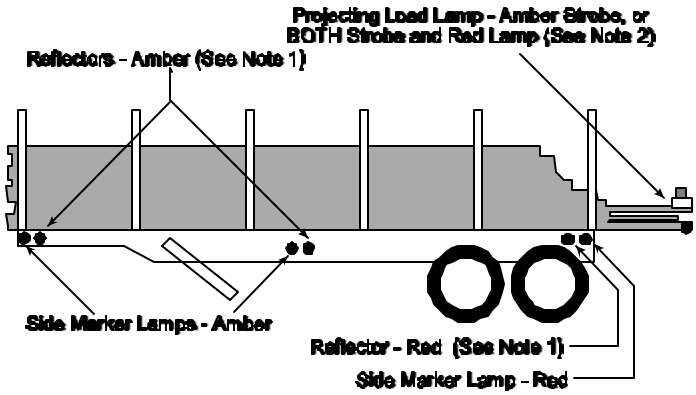


**Side View: Loaded Log Trailer**

NOTES:
1. Reflectors may be combined with Side Marker Lamp lenses, provided lenses are constructed of reflective materials.

2. Projecting Load Lamp ***MUST*** be visible from ***BOTH*** the ***SIDES*** and ***REAR*** of the trailer. Projecting load lamps must be used when the load extends four feet (4') or more beyond the body or frame.
At any time, day or night, projecting loads must use:
a. A strobe lamp, amber in color, visible to both sides and the rear; and may use:
b. A steady burning red lamp, visible to both sides and the rear.

3. Center side reflectors must be not less than 4 inches in diameter.

Illustration # 10

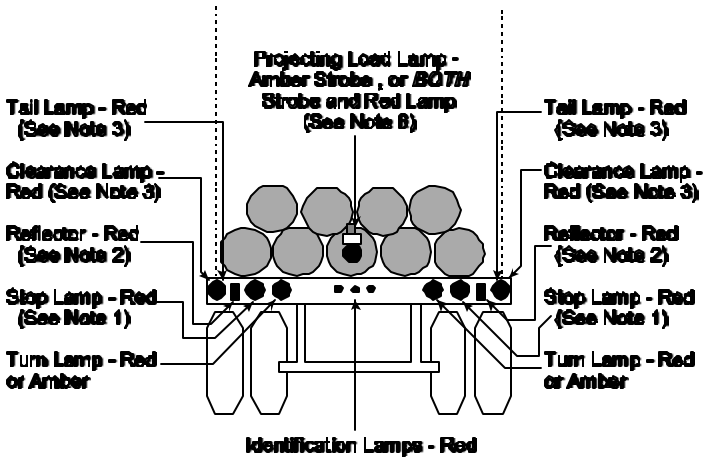


**Rear View : Loaded Log Trailer**

NOTES:

1. Stop, Tail, and Turn Lamps may be combined into one housing using a multi-filament type bulb; the Stop and Turn functions must be brighter than the Tail lamp (See §393.22).

2. The Red Reflectors may be combined with a Stop, Tail, Turn, or Clearance Lamp, provided the lenses are c onstructed of a reflective material.

3. Clearance Lamps or Tail Lamps must be mounted so as to indicate the extreme width of the trailer.

4. The rear of a Pulpwood (short-wood) trailer shall be equipped with the same type and location of lighting and ref lectors as a long-wood type trailer, except that a Projecting Load Lamp is not required under ordinary circumstances.

5. The rear of flat-bed, low-boy, and loader trailers shall be equipped with the same type and number of lights and reflectors as indicated in this illustration.

6. Projecting Load Lamp ***MUST*** be visible from ***BOTH*** the ***SIDES*** and ***REAR*** of the trailer. Projecting load lamps must be used when the load extends four feet (4') or more beyond the body or frame.
At any time, day or night, projecting loads must use:
a. A strobe lamp, amber in color, visible to both sides and the rear; and may use:
b. A steady burning red lamp, visible to both sides and the rear.

Illustration # 11

**4-3-393.11PL Strobe lamp on the rear of projecting loads.**

(a) Motor vehicles transporting loads which extend more than 4 feet beyond the body or bed of such vehicle, shall have securely affixed as close as practical to the end of such projections one amber strobe type lamp equipped with a multi-directional type lens so mounted as to be visible from the rear and sides of the projecting load. If the mounting of one strobe lamp cannot be accomplished so as to be visible from both sides and the rear of the projecting load, multiple strobe lamps shall be utilized so as the meet the visibility requirements.

(b) The strobe lamp shall flash a rate of at least 60 flashes per minute and shall be plainly visible from a distance of at least 500 feet to the sides and rear of the projecting load any time of the day or night. The lamp shall be operating at any time of the day or night when the vehicle is operated on any highway or parked on the shoulder or immediately adjacent to the traveled portion of any public roadway.

(c) The use of red marker lamps on projecting loads as enumerated in O.C.G.A. §40-8-27, being transported on vehicles under the jurisdiction of the Public Service Commission, are not required if a strobe lamp is utilized as required by this rule.

(d) The projecting load shall also be marked with flag(s) as required by §393.87 of these rules.

(e) In addition to the requirements of this Section and §393.11 above, motor vehicles transporting projecting loads in interstate commerce are required to comply with the Federal Motor Carrier Safety Regulations under Title 49 CFR.

## Subpart G - Miscellaneous Parts and Accessories.

**4-3-393.87 Flags on projecting loads.**

(a) Any motor vehicle having a load or vehicle component which extends more than 4 inches beyond the sides or more than 4 feet beyond the rear shall have the extremities of the load marked with a red flag, not less than 12 inches square, at each point where a lamp is required by Commission Transportation Rule 4-1-393.11.

(b) The flag as required by Commission Transportation Rule §393.11PL shall be of a bright red or orange color not less than 12 inches square which is clearly visible and shall be displayed in such a manner that the entire area of the flag is visible from the rear of the vehicle. Such a display shall be accomplished by a rigid type flag, or a rigid type mounting frame for a flexible flag, or by other means at least as effective.

(c) Flags may be made either partially or completely of a retro reflective material.

## Subpart H-Emergency Equipment

**4-3-393.95 Emergency equipment**

(g) *Restrictions on the use of flame-producing devices.* No vehicle transporting unmanufactured forest products may be equipped with or use any flame-producing stopped vehicle warning devices, including, but not limited to, liquid-burning flares, fusees, oil lanterns.

## Subpart I - Protection against shifting and falling cargo.

### 4-3-393.100 General rules for protection against shifting or falling cargo.

(a) *Application and scope of the rules in this section.* This section applies to trucks, truck tractors, semi-trailers, full trailers, and pole trailers (pulpwood trailers). Each of those motor vehicles must, when transporting cargo, be loaded and equipped to prevent the shifting or falling of the cargo in the manner prescribed by the rules in paragraph (b) of this section. In addition, each cargo-carrying motor vehicle must conform to the application rules in 393.102, 393.104, and 393.106. EXCEPTION: Vehicles transporting unmanufactured forest products must conform to §§393.102, 393.106 and paragraph (g) of this section.

### 4-3-393.100(g) Special rule for unmanufactured forest products vehicles.

(1) *Basic protection components.* Each cargo-carrying motor vehicle must be equipped with devices providing protection against shifting or falling cargo that meet the following requirements:

(a) Each motor vehicle transporting logs, tree-length pulpwood and short wood (pulpwood) equipped with permanent, fixed, or trip standards shall be secured with binder chains of at least one-quarter inch high test (Grade 4) or cables, straps, or other chains of at least equivalent strength.

(i) Option A. Each load of short pulpwood loaded perpendicular to the axis of the truck or trailer body shall be required to be secured by only one binder chain or cable, strap, or other chain meeting the specifications as provided in this paragraph.

(ii) *Option B.* Each tree-length load of pulpwood or logs shall be required to be secured with no less than two binder chains, cables, straps or other chains which shall be located at the center and end of the load. Such binder chains, cables, straps or other chains shall meet the specifications provided in this paragraph.

(iii) *Option C.* Each load of pulpwood or cut logs loaded on multiple racks, shall be required to be secured by only one binder chain meeting the specifications of this paragraph.

(iv) *Option D.* Each load of sawdust, wood chips, bark, or pine straw carried in open top trailers must be secured on the top with a tarpaulin or similar cover, which must prevent the loss of cargo in normal transportation. Tarpaulins alone may not be used for side securement, but may be used to supplement other side securement.

(b) All such chains, cables, or straps shall be equipped with load binder and hardware (tightening device). Said binders or tightening device shall meet the minimum strength requirements specified in paragraph (a), above.

(c) All pallets or racks used to carry pulpwood or logs shall be bound to the frame or body of the truck or trailer.

(d) All standards must be of metal construction of a strength which will secure the load if the load shifts.

(i) Each standard must be adequately anchored to the bolster in such a manner that the load will be secured if the load shifts.

(ii) Standard extensions must be of metal construction and firmly secured to the standard.

(iii) Each trip standard must be secured with a locking pin and cable of sufficient strength to hold the standard in an upright position if the load shifts.

(iv) Loads shall not extend beyond the height of the highest standard.

(v) Standards and standard extensions must not extend beyond a total trailer height of thirteen feet, six inches (13' 6").

(e) Chains, binders, cables, straps, and other securement devices must be in good condition. Chains may not be bolted together, and any repairs to chains must be of the clevis type and at least the strength of the original chain.

Note: The following rules do not apply to vehicles engaged solely in the intrastate transportation of unmanufactured forest products (as defined in 4-3-§390.5 of this subchapter).
Definitions for: *"Agricultural commodity trailer," "Bus," "Container chassis," "Converter Dolly," "Curb weight,"* and *"License plate lamp"* found in §393.5;
§393.44, 393.63 (both relating to buses),
§393.88 (relating to television receivers),
§393.89, 393.90, 393.91, 393.92, 393.93(a)(1)(2)(3) (all relating to buses), and
§393.94 (relating to interior noise levels).

**NOTE: Balance of Part 393, except as amended herein, is contained in Commission's Motor Carrier Safety Regulations issued under Subchapter 4-1.**

## Part 395

## Hours Of Service
(For Unmanufactured Forest Products)
(See Note)

**4-3-395 Motor Carrier Safety Regulations—Hours of Service.**

Except as amended herein, Balance of Rule 4-3-395, is contained in the Motor Carrier Safety Regulations of the Georgia Public Service Commission contained in Rule 4-1-395.

**4-3-395.1 Applicability.**

None of the rules in Part 395 apply to vehicles and drivers engaged solely in the intrastate transportation of unmanufactured forest products.

**NOTE: None of Part 395 applies to vehicles engaged solely in the intrastate transportation of unmanufactured forest products.**

## Part 396

## Inspection, Repair, And Maintenance
(For Unmanufactured Forest Products)
(See Notes)

**4-3-396 Motor Carrier Safety Regulations—Inspection, Repair, and Maintenance.**

Except as amended herein, Balance of Rule 4-3-396, is contained in the Motor Carrier Safety Regulations of the Georgia Public Service Commission contained in Rule 4-1-396.

**Note: The following rules do not apply to vehicles engaged solely in the intrastate transportation of unmanufactured forest products (as defined in 4-3-§390.5 of this subchapter):**
**§396.3(a)(2) (relating to bus windows), and**
**§396.11, §396.13, §396.15, (all relating to daily inspection reports)**

**Note: Balance of Part 396, except as amended herein, is contained in Commission's Motor Carrier Safety Regulations issued under Subchapter 4-1.**

**Note: For regulations on commercial motor vehicles transporting other than manufactured forest products, see Subchapter 4-1 of the Commission's Transportation Rules.**

# TRANSPORTATION RULES
# OF
# GEORGIA PUBLIC SERVICE COMMISSION

## SUBCHAPTER 4-4: LIMOUSINE SAFETY RULES

Table Of Contents


| | | | |
|---|---|---|---|
| **Part 4-4-1** | **General** | **Part 4-1-393** | **Parts and Accessories Necessary for Safe Operation** |
| **Part 4-4-390** | **General** | **Part 4-1-395** | **Hours of Service of Drivers** |
| **Part 4-1-391** | **Qualifications of Drivers** | **Part 4-1-396** | **Inspection, Repair and Maintenance** |
| **Part 4-1-392** | **Driving of Motor Vehicles** | | |


### 4-4-1.1 Applicability.

(a)The limousine safety rules and regulations of the Georgia Public Service Commission are the minimum safety requirements for all limousines operating for hire interstate and intrastate commerce in Georgia, and to the extent that they do not conflict with Georgia law; and where applicable, are the same as the Motor Carrier Safety Regulations issued by the Commission as provided in Chapter 4-1 of the Commission's Transportation Rules, except as amended herein.

(b) All references to the U.S. Department of Transportation except when used to designate approval of mechanical specifications shall be interpreted to mean the Georgia Public Service Commission.

(c) Any reference in the regulations to the "Operations Manager" and/or "Associate Administrator, Federal Motor Carrier Safety Administration," shall be interpreted to mean Director, Transportation Division, Georgia Public Service Commission, except insofar as the term relates to preemption.

(d) All references to "interstate" commerce shall be interpreted to include "intrastate" commerce. It is the intent of the Commission that the regulations shall apply to intrastate carriers and operations.

(e) Where the Federal regulations as adopted by the Commission refer to "carriers" or "motor carriers," the term shall be taken to mean all for hire limousine carriers subject to the Commission's jurisdiction pursuant to Title 46 O.C.G.A.

**Note: Copies of the U.S. Department of Transportation's Motor Carrier Safety Regulations may be obtained from the U.S. Government Printing Office, Superintendent of Documents, Washington, DC 20402.**

**4-4-1.2 Reports.**

(a) All reports required by the safety regulations shall be sent to the Georgia Public Service Commission, Transportation Division, 1007 Virginia Avenue, Suite 310, Hapeville, Georgia 30354-1325, in addition to any copies required to be sent to any Federal Agency.

(b) The Georgia Public Service Commission will accept forms prescribed by the U.S. Department of Transportation where required by the safety regulations.

**4-4-1.3 Penalties.**

(a) *Criminal penalty.* In addition to any other penalty imposed by law, violations of any provision of this chapter shall constitute a misdemeanor, pursuant to O.C.G.A. §16-1-10, §46-2-93 and §46-7-39.

(b) *Civil penalty.* In addition to any other penalty imposed by law, violations of this chapter shall be subject to the provisions of O.C.G.A. §46-2-91.

**4-4-1.4 Construction.**

(a) Unless amended herein, the rules in this chapter numbered beyond 4-4-300 shall generally be the same as the rules contained in the Federal Motor Carrier Safety Regulations. Where reference is made to a federal rule number (e.g., "390.5") the compatible state rule shall be deemed to be "4-4-" followed by the Federal rule number (e.g., "49 CFR §390.5" becomes "4-4-390.5").

(b) References on Commission documents to a Federal rule by Federal Section number shall be construed as a valid cite of the Commission's rules and regulations without listing the entire Commission section reference (e.g., "390.21" equals "4-4-390.21").

## Part 390

## General

**4-4-390 Limousine Safety Regulations—General**.

Except as amended by the Commission herein, balance of Rule 4-3-390 is contained in the Motor Carrier Safety Regulations of the Georgia Public Service Commission contained in Rule 4-1-390, and as amended.

**4-4-390.3 (a) General Applicability.**

(a) The rules in Subchapter B of this chapter are applicable to all employers, employees, and limousines, which transport property or passengers in interstate or intrastate commerce.

**4-4-390.5 Definitions.**

Balance of § 390.5 definitions, except as amended herein, are contained in Commission Rule 4-1-390.5. The following definitions are hereby inserted in the appropriate alphabetical order:

*Chauffeur* means any person with a Georgia state driver's license who meets the qualifications as prescribed in Commission Transportation Rule 5-4-2.3 and who is authorized by the Public Service Commission to drive a luxury limousine under this chapter.

*Lightweight commercial motor vehicle* - (See 4-1-390.5)

*Limousine carrier* means any person operating a service regularly rendered to the public by furnishing transportation as a motor common carrier for hire, not over fixed routes, by means of limousines, or extended limousines, on the basis of telephone contract or written contract.

*Limousine* or *Luxury limousine* means any motor vehicle that meets the manufacturer's specifications for a luxury limousine with a designated seating capacity for no more than ten passengers and with a minimum of five seats located behind the operator of the vehicle, and which does not have a door at the rear of the vehicle designed to allow passenger entry or exit; further, no vehicle shall be permitted to be operated both as a taxicab and a limousine.

**4-4-390.21 Identification of Luxury Limousines.**

(a) Prior to operating luxury limousines over the highways of Georgia for which registration and licensing of such equipment has been made, every motor carrier holding a certificate to transport passengers in luxury limousines shall affix to the front bumper a standard size license plate with the following information:

(1) Limousine company name;

(2) City and state of principal domicile;

(3) Company telephone number; and,

(4) Vehicle classification - IE-1.

(b) Luxury limousines which also operate in interstate commerce must comply with the identification requirements of any federal agency with jurisdiction.

## Part 391

## Qualification of Drivers of Limousines

**4-4-391 Limousine Safety Regulations—Qualifications of Drivers.**

Except as amended by the Commission herein, Balance of Rule 4-4-391, is contained in the Motor Carrier Safety Regulations of the Georgia Public Service Commission contained in Rule 4-1-391, and as amended.

**4-4-391.11 Qualification of Limousine Drivers.**

(a) A person shall not drive a limousine unless he/she is qualified to drive a motor vehicle. A limousine carrier shall not require or permit a person to drive a limousine unless that person is qualified to drive a limousine.

(b) A person is qualified to drive a commercial motor vehicle if he/she—

(1) Is at least 18 years old;

(2) Can read and speak the English language sufficiently to converse with the general public, to understand highway traffic signs and signals in the English language, to respond to official inquiries, and to make entries on reports and records;

(3) Can, by reason of experience, training, or both, safely operate the type of motor vehicle he/she drives;

(4) Has a currently valid motor vehicle operator's license issued by Georgia, and no other currently valid license from another jurisdiction;

(5) Has a currently valid chauffeur's permit issued by the Commission;

(6) Is not disqualified to drive a motor vehicle under Georgia law or the laws of another state;

(7) Is not disqualified from holding a chauffeur's permit under O.C.G.A. §46-7-85.10; and,

(8) Successfully passes the background investigation required to determine disqualification under O.C.G.A. §46-7-85.10.

## Part 392

## Driving of Limousines

**4-4-392 Limousine Safety Regulations—Driving of Motor Vehicles.**

Except as amended by the Commission herein, Balance of Rule 4-4-392 is contained in the Motor Carrier Safety Regulations of the Georgia Public Service Commission, Rule 4-1-392, and as amended.

**4-4-392.4 Drugs and other substances.**

(a) No driver shall be on duty and possess, be under the influence of, or use, any of the following drugs or other substances:

(1) Any 21 CFR 1308.11 Schedule I substance;

(2) An amphetamine or any formulation thereof (including, but not limited, to "pep pills," and "bennies");

(3) A narcotic drug or any derivative thereof; or

(4) Any other substance, to a degree which renders the driver incapable of safely operating a motor vehicle.

(b) No motor carrier shall require or permit a driver to violate paragraph (a) of this section.

(c) Paragraphs (a) (2), (3), and (4) do not apply to the possession or use of a substance administered to a driver by or under the instructions of a licensed medical practitioner, as defined in 49 CFR §382.107 of this subchapter, who has advised the driver that the substance will not affect the driver's ability to safely operate a motor vehicle.

(d) As used in this section, "possession" does not include possession of a substance which is manifested and transported as part of a shipment.

**4-4-392.5 Alcohol prohibition.**

(a) No driver shall—

(1) Use alcohol, as defined in 49 CFR §382.107 of this subchapter, or be under the influence of alcohol, within 4 hours before going on duty or operating, or having physical control of, a motor vehicle; or

(2) Use alcohol, be under the influence of alcohol, or have any measured alcohol concentration or detected presence of alcohol, while on duty, or operating, or in physical control of a motor vehicle; or

(3) Be on duty or operate a commercial motor vehicle while the driver possesses wine of not less than one-half of one percentum of alcohol by volume, beer as defined in 26 U.S.C. 5052(a), of the Internal Revenue Code of 1954, and distilled spirits as defined in § 5002(a)(8), of such Code. However, this does not apply to possession of wine, beer, or distilled spirits which are possessed or used by limousine passengers.

(b) No motor carrier shall require or permit a driver to—

(1) Violate any provision of paragraph (a) of this section; or

(2) Be on duty or operate a motor vehicle if, by the driver's general appearance or conduct or by other substantiating evidence, the driver appears to have used alcohol within the preceding four hours.

(c) Any driver who is found to be in violation of the provisions of paragraph (a) or (b) of this section shall be placed out of service immediately for a period of 24 hours.

(1) The 24-hour out of service period will commence upon issuance of an out of service order.

(2) No driver shall violate the terms of an out of service order issued under this section.

(d) Any driver who is issued an out of service order under this section shall report such issuance to his/her employer within 24 hours.

## Part 393

## Parts and Accessories Necessary for Safe Operation of Limousines

**4-4-393 Limousine Safety Regulations—Parts and Accessories Necessary for Safe Operation.**

Except as amended by the Commission herein, Balance of Rule 4-4-393 is contained in the Motor Carrier Safety Regulations of the Georgia Public Service Commission in Rule 4-1-393, and as amended.

**4-4-393.1 Scope of the rules in this part.**

Every employer and employee shall comply and be conversant with the requirements and specifications of this part. No employer shall operate a vehicle or cause it to be operated, unless it is equipped in accordance with the requirements and specifications of this part.

**4-4-393.2 General requirements.**

Every motor vehicle operated by a limousine carrier shall be equipped with every component required by the Federal Motor Vehicle Safety Standard (FMVSS) (49 CFR Part 571) in effect on the date of manufacture of the vehicle. All such components will be maintained in proper operating condition.

**4-4-393.3 Additional equipment and accessories.**

Nothing contained in this part shall be construed to prohibit the use of additional equipment and accessories, not inconsistent with or prohibited by this part, provided such equipment and accessories do not decrease the safety of operation of the vehicle on which they are used.

**4-4-393.9 Lighting devices.**

(a) All lamps required by this part shall be capable of being operated at all times.

(b) Every limousine shall be equipped at least with the following lamps, and such lamps shall also comply with Commission Transportation Rule 4-4-393.2.

(1) *Headlamps:* At least two, mounted on front at the same height, an equal number at each side of the vertical centerline as far apart as practicable.

(2) *Turn signals:*

(i) *Front:* Two, one on each side of the vertical centerline at the same height and as far apart as practicable.

(ii) *Rear:* Two, one on each side of the vertical centerline at the same height and as far apart as practicable.

(3) *Stop lamps:* At least two, one lamp each side of the vertical centerline at the same height and as far apart as practicable.

(4) *Tail* lamps: At least two, one lamp each side of the vertical centerline at the same height and as far apart as practicable.

**4-4-393.33 Wiring.**

Electrical wiring shall be systematically arranged and installed in a workmanlike manner. The presence of bare, loose, dangling, chafing, or poorly connected wire is prohibited.

**4-4-393.48 Brakes.**

All brakes with which a vehicle is equipped must at all times be capable of operating.

**4-4-393.51 Warning devices.**

A vehicle must be equipped with a device that provides a warning to the driver when a failure occurs in the vehicle's brake system.

**4-4-393.60 Glazing.**

(a) Every vehicle shall be equipped with a windshield which shall be free of discoloration or other damage except coloring or tinting applied in manufacture, for reduction of glare. Such coloring or tinting shall meet the requirements of §40-8-73.1.

(b) No vehicle may be operated with any label, sticker, decalcomania, or other vision-reducing matter covering any portion of its windshield or windows at either side of the driver's compartment, except that stickers required by law may be affixed at the bottom of the windshield, provided no part of the sticker may extend upward more than 4 ½inches from the bottom of the windshield.

**4-4-393.65 Fuel systems.**

Each fuel system, tank and lines, must be securely attached to the vehicle and be free of any leaks. Each fuel tank or filler pipe must be equipped with a securely affixed cap.

**4-4-393.75 Tires.**

(a) No vehicle shall be operated on any tire that:

(1) Has body ply or belt material exposed through the tread or sidewall;

(2) Has any tread or sidewall separation;

(3) Is flat or has an audible leak;

(4) Has a cut to the extent that the ply or belt material is exposed.

(b) Any tire on the vehicle shall have a tread groove pattern depth of at least 4/32 of an inch when measured at any point on a major tread groove. The measurements shall not be made where tie bars, humps, or fillets are located.

(c) No vehicle shall be operated:

(1) With tires that carry a greater weight than specified and marked on the sidewall of the tire.

(2) On a tire which has a cold inflation pressure less than that specified for the load being carried.

**4-4-393.79 Defrosting device.**

Every vehicle when operating under conditions such that ice, snow, or frost would be likely to collect on the outside of the windshield or condensation on the inside of the windshield shall be equipped with a device or other means, not manually operated, for preventing or removing such obstructions to the driver's view.

**4-4-393.80 Rear-vision mirrors.**

Every vehicle shall be equipped with two rear-vision mirrors, one at each side, firmly attached to the outside of the vehicle, and so located as to reflect to the driver a view of the highway to the rear, and along both sides of the vehicle.

**4-4-393.81 Horn.**

Every vehicle shall be equipped with a horn and actuating elements which shall be in such condition as to give an adequate and reliable warning signal.

**4-4-393.82 Speedometer.**

Every vehicle shall be equipped with a speedometer indicating vehicle speed in miles/kilometers per hour, which shall be operative with reasonable accuracy.

**4-4-393.83 Exhaust system.**

(a) Every vehicle capable of expelling harmful combustion fumes shall have a system to direct the discharge of such fumes. No part shall be located where its location would likely result in burning, charring, or damaging the electrical wiring, the fuel system, or any combustible part of the vehicle.

(b) No exhaust system shall discharge to the atmosphere at a location immediately below the fuel tank or the fuel tank filler pipe.

(c) The exhaust system of every vehicle shall discharge at a location to the rear of the passenger compartment.

(d) No part of the exhaust system shall be temporarily repaired with wrap or patches.

(e) The exhaust system must be securely fastened to the vehicle.

**4-4-393.84 Floors.**

The flooring in all vehicles shall be substantially constructed, free of unnecessary holes and openings, and shall be maintained so as to minimize the entrance of fumes, exhaust gases, or fire.

**4-4-393.88 Television receivers.**

Any vehicle equipped with a television viewer, screen or other means of producing a picture for viewing shall have the viewer or screen located in the vehicle at a point to the rear of the back of the driver's seat and shall be so located as not to be visible to the driver, while he/she is driving the vehicle, and the controls shall be so located that the driver cannot operate them without leaving the driver's seat.

**4-4-393.93 Seat belts.**

Every vehicle shall be equipped with a seat safety belt, approved under Federal Motor Vehicle Safety Standard (FMVSS) No. 208, 49 CFR §571.208, for each seating position.

**4-4-393.95 Emergency equipment.**
Every vehicle must be equipped as follows:

(a) *Fire extinguisher*. Every vehicle must be equipped with a fire extinguisher that is properly filled and located so that it is readily accessible for use. The fire extinguisher must be securely mounted and must be designed, constructed, and maintained to permit visual determination of whether it is fully charged

(b) *Warning devices for stopped vehicles.* Every vehicle must be equipped with three emergency reflective triangles that conform to the requirements of the Federal Motor Vehicle Safety Standard (FMVSS) No. 125, 49 CFR §571.125.

**4-4-393.201 Frames**.

(a) The frame of every vehicle shall not be cracked, loose, sagging or broken.

(b) Bolts or brackets securing the body of the vehicle to the frame must not be loose, broken or missing.

**4-4-393.203 Body components.**

(a) The vehicle doors or door parts used as entrance or exit shall not be missing or broken. Doors shall not sag so that they cannot be properly opened or closed. No door shall be wired shut or otherwise secured in the closed position so that it cannot be readily opened.

(b) The hood must be securely fastened.

(c) All seats must be securely mounted.

(d) The front bumper must not be missing, loosely attached or protruding beyond the confines of the vehicle so as to create hazard.

**4-4-393.205 Wheels.**

(a) Wheels and rims shall not be cracked or broken.

(b) Stud or bolt holes on the wheels shall not be elongated (out of round).

(c) Nuts or bolts shall not be missing or loose.

**4-4-393.207 Suspension systems.**

(a) No axle positioning part shall be cracked, broken, loose or missing. All axles must be in proper alignment.

(b) No leaf spring shall be cracked, broken, or missing nor shifted out of position.

(c) No coil spring shall be cracked or broken.

**4-4-393.209 Steering wheel systems.**

(a) The steering wheel shall be secured and must not have any spokes cracked through or missing.

(b) Steering wheel lash (free play) must not exceed the following parameters:

| Steering wheel diameter | Manual steering system lash (maximum) | Power steering system lash (maximum) |
|---|---|---|
| 16" or less | 2" | 4-1/2" |
| 18" | 2-1/4" | 4-3/4" |
| 20" | 2-1/2" | 5-1/4" |
| 22" | 2-3/4" | 5-3/4" |

(c) The steering column must be securely fastened.

(d) Universal joints shall not be worn, faulty or repaired by welding. The steering gear box shall not have loose or missing mounting bolts or cracks in the gear box or mounting brackets. The steering wheels shall turn freely through the limit of travel in both direction.

(e) All components of the power steering system must be in operating condition. No parts shall be loose or broken. Belts shall not be frayed, cracked or slipping. The system shall not leak and the system shall have sufficient fluid in the reservoir.

## Part 395

## Hours of Service of Limousine Drivers

**4-4-395 Limousine Safety Regulations—Hours of Service.**

Except as amended by the Commission herein, Balance of Rule 4-4-395 is contained in the Motor Carrier Safety Regulations of the Georgia Public Service Commission contained in Rule 4-1-395, and as amended.

**4-4-395.1 Applicability.**

None of the rules in Part 395 apply to vehicles and drivers engaged solely in limousine transportation.

## Part 396

## Inspection, Repair and Maintenance of Limousines

**4-4-396 Limousine Safety Regulations—Inspection, Repair and Maintenance.**

Except as amended by the Commission herein, Balance of Rule 4-4-396 is contained in the Motor Carrier Safety Regulations of the Georgia Public Service Commission contained in Rule 4-1-396, and as amended

**4-4-396.17 Annual Inspection.**

Pursuant to Commission Transportation Rule 5-4-2.4, all luxury limousines must be inspected annually by personnel designated by the Commission for compliance with the safety rules in this chapter and upon compliance have a safety decal affixed by the inspector. In addition to meeting the safety requirements every luxury limousine shall meet the identification requirements in Rule 4-4-390.21.

# TRANSPORTATION RULES
# OF
# GEORGIA PUBLIC SERVICE COMMISSION

## SUBCHAPTER 4-5: SAFETY OPERATIONS REVIEWS

### Table Of Contents

**4-5.1 Applicability and Scope**
**4-5.2 Safety Operations Reviews**

### 4-5.1 Scope of Rules in this subchapter.

The provisions of this Subchapter apply to motor carriers of property or passengers and other persons subject to the jurisdiction of the Commission.

### 4-5.2 Safety Operations Reviews.

The Commissioners or designated staff members are authorized to conduct Safety Operations Reviews of motor carriers under its jurisdiction for the purpose of determining compliance with the laws, rules, regulations, and orders of the Commission or the Federal Motor Carrier Safety and/or Hazardous Material Regulations. Said Commissioners or staff members are authorized to enter upon, to inspect, and to examine any and all lands, buildings, and equipment of motor carriers and other persons subject to the jurisdiction of the Commission, and to inspect and copy any and all accounts, books, records, memoranda, correspondence, and other documents of such carriers and other persons.

(b) Motor Carriers and other persons subject to the jurisdiction of Commission shall submit their accounts, books, records, memoranda, correspondence, and other documents for inspection and copying, and shall submit their lands, buildings, and equipment for examination and inspection. Upon request, display of a Commission issued credential identifying him/her as a Commissioner or staff member shall be made. If a motor carrier uses photographic, microfilm, or electronic record keeping technology, it shall make such records available in accordance with Section 390.31 of the Commission's rules.

(c) The Commission and their staff members are authorized to conduct joint investigations and reviews of motor carriers and other persons with officials of the United States Department of Transportation and their administrations for the purpose of determining compliance with State or Federal laws, rules, regulations, and orders pertaining to motor carrier operations and the transportation of hazardous materials. Consistent with 49 C.F.R. Part 388, the Commission and its staff shall exchange information with the United States Department of Transportation that comes to their attention that is believed to indicate a violation of any provision of the safety or hazardous material laws, rules, regulations, or orders of the United States Department of Transportation.

# TRANSPORTATION RULES
# OF
# GEORGIA PUBLIC SERVICE COMMISSION

## CHAPTER 5: CERTIFICATED CARRIERS

## Table Of Contents

**Subchapter 5-1** **General Provisions**
**Subchapter 5-2** **Households Goods Carriers**
**Subchapter 5-3** **Passenger Carriers**
**Subchapter 5-4** **Limousine Carriers**
**Subchapter 5-5** **Rates and Tariffs**
**Subchapter 5-6** **Revenue and Expense Reports**

# TRANSPORTATION RULES
# OF
# GEORGIA PUBLIC SERVICE COMMISSION

## SUBCHAPTER 5-1: GENERAL PROVISIONS

### Table Of Contents


| | |
|---|---|
| 5-1-1.1 | Applicability |
| 5-1-1.2 | Reports |
| 5-1-1.3 | Penalties |
| 5-1-2.1 | Unjust Discrimination Prohibited |
| 5-1-2.2 | Duty to Accept and Transport Commodities |
| 5-1-2.3 | Free Service Forbidden |
| 5-1-2.4 | Rates and Services as Required by the Commission |
| 5-1-2.5 | Discontinuance of Service |
| 5-1-2.6 | Claims for Overcharge and Loss |
| 5-1-2.7 | Application for Interim Certificates |
| 5-1-2.8 | Application Fees |
| 5-1-2.9 | Requirements for Issuance of Certificate |
| 5-1-2.10 | Carrier Qualifications for Issuance of Interim Certificate or Transfer of Permanent Certificate |
| 5-1-2.11 | Application of Passenger Carriers to Abandon Service |
| 5-1-2.12 | Temporary Emergency Authority |
| 5-1-2.13 | Refiling for Interim Certificate |
| 5-1-2.14 | Transfer of Permanent Certificates |
| 5-1-2.15 | Reinstatement or Cancellation of Certificate |
| 5-1-2.16 | Class "B" Interim Certificate Operations |
| 5-1-2.17 | Misrepresentation of Certificate Operations; Leasing of Certificate Prohibited |


### 5-1-1.1 Applicability.

The provisions of this chapter apply to persons transporting household goods or passengers (excluding charter operations) for hire in intrastate transportation that are required to hold certificates of public convenience and necessity under any of the Motor Carrier Acts of this state.

### 5-1-1.2 Reports.

It shall be the duty of the carrier to produce for inspection by the Commission or any of its representatives, any and all books, papers, contracts, agreements and other original records of any character whatsoever that may be in possession of said carrier, or within its power, custody or control, or copies thereof, as may be demanded and designated by the Commission.

### 5-1-1.3 Penalties.

(a) *Criminal penalty.* In addition to any other penalty imposed by law, violations of any provision of this chapter shall constitute a misdemeanor, pursuant to O.C.G.A. §46-2-93 and §46-7-39.

(b) *Civil penalty.* In addition to any other penalty imposed by law, violations of this chapter shall be subject to the provisions of O.C.G.A. §46-2-91.

### 5-1-2.1 Unjust Discrimination Forbidden.

All carriers, in the conduct of their intrastate business, shall afford to all persons equal facilities in the conduct of such business, without unjust discrimination in favor of, or against any; and wherever special facilities are afforded to one patron whether by special rate or fare authorized by this Commission or otherwise, such carrier shall be bound to afford to any other patron, or patrons, under substantially similar circumstances, like facilities upon like rates or

fares, but the Commission will prescribe by general order to what persons motor carriers or railroads may issue passes or free transportation and reduced rates for special occasions.

**5-1-2.2 Duty to Accept and Transport Commodities.**

It shall be the duty of any household goods carrier to accept for transportation any authorized commodities, the carriage of which by such carrier is reasonably safe and practicable and to transport the same as soon as practicable.

**5-1-2.3 Free Service Forbidden.**

No carrier transporting household goods or passengers under a Certificate subject to the jurisdiction of this Commission, shall, directly or indirectly, give or furnish any free or reduced rate service in this State, except as lawfully prescribed by the Commission (Also see Commission Transportation Rule 5-3-2.3).

**5-1-2.4 Rates and Services as Required by the Commission.**

(a) All rates, fares, charges, rules and regulations now in effect that relate to the transportation of household goods and passengers or which may hereafter become effective, which are not higher than the maximum rates, fares, or charges prescribed by the Commission are hereby established as the rates, fares, or charges of the Commission. No such rates, fares or charges shall, unless otherwise provided, be discontinued or changed without the consent of the Commission.

(b) Failure of the holder of any certificate to comply with schedules and/or rates and fares approved by the Commission and to hold itself out as ready, able and willing to provide adequate service in the transportation of any household goods or passengers authorized to be transported in said certificate, shall be reasonable cause to suspend, revoke, alter or amend said certificate at any time after notice and opportunity to be heard is afforded the carrier.

**5-1-2.5 Discontinuance of Service.**

(a) Motor carriers transporting passengers operating under Class "AF" certificates issued prior to July 1, 2000 will be allowed to discontinue their entire service on any route upon thirty days' notice, to be prescribed by the Commission and thereupon their certificates shall be canceled.

(b) Holders of Class "AF" certificates may be allowed to permanently discontinue any part of their service on any route upon thirty days' published notice, subject, however, to the discretion of the Commission to withdraw or suspend the certificate for the entire route if, in the opinion of the Commission, such diminished service is not adequate or any longer compatible with the public interest.

(c) No motor common carrier operating under Class "AF" certificates shall temporarily suspend operation either wholly or in part, except upon authority from the Commission.

(d) All other motor carriers may suspend or abandon service immediately by surrendering their certificates, for cancellation and returning to the Commission all licenses issued thereunder.

**5-1-2.6 Claims For Overcharge and Loss.**

All household goods claims for overcharge, loss or damage, shall be handled to completion within 90 days after claim is filed with the carrier. Claims for loss or damage shall be

paid by the carrier at fault, but claims for overcharge shall be paid by the carrier which collected same.

**5-1-2.7 Application for Interim Certificates of Public Convenience and Necessity (Also see 2-1.4).**

Every corporation or person owning, controlling, operating or managing any motor propelled vehicle (and lessees, or receivers, or trustees thereof, appointed by any court whatsoever), before operating any motor vehicle upon the public highways of the State for the transportation of passengers (except charter service) or household goods, for hire, within the purview of the Motor Carrier Acts, shall apply to the Commission for an interim Certificate of Public Convenience and Necessity in the following manner:

(a) Application shall be made to the Commission in writing on forms prescribed by the Commission. The application should be typewritten or legibly handwritten in ink.

(b) All information required on said application forms (where applicable) shall be given in full and all questions thereon shall be answered correctly. In the event portions of the application are not applicable to applicant, they must be answered "Not applicable."

(c) All applicants for an Interim Certificate of Public Convenience and Necessity to operate over no fixed route shall state in the application the territory to be served; the radius in miles within which it proposes to operate from its base point; or state-wide.

(d) All applicants for an Interim Certificate of Public Convenience and Necessity or amendments to permanent Certificates, shall state in the application the name of the carrier whose rates are being adopted by the applicant, or in the alternative, furnish complete tariff along with the application naming the rules, regulations, rates and charges proposed to be charged by the applicant.

(e) When an interim certificate is sought by a partnership, such partnership shall designate in writing one of the partners who shall have authority and who shall be recognized by the Commission in all matters arising under the law or these rules.

**5-1-2.8 Application Fees.**

Application for an Interim Certificate of Public Convenience and Necessity, amendment to an existing permanent Certificate, transfer of certificate, and application for emergency temporary authority, must be accompanied by cashier's check, certified check, U.S. Post Office money order or express money order, payable to "GEORGIA PUBLIC SERVICE COMMISSION" in amounts prescribed by law and set forth below:

(a) A fee of $75 where applicant owns or operates less than six (6) motor vehicles;

(b) A fee of $150 where applicant owns or operates six (6) to fifteen (15) motor vehicles;

(c) A fee of $200 where applicant owns or operates over fifteen (15) vehicles;

(d) A fee of $75 for transfer of a certificate;

(e) A fee of $50 for emergency temporary authority.

(f) An additional fee of $15.00 for advertising must accompany the application for a certificate or an amendment thereto.

No application will be assigned for hearing or given consideration by the Commission unless accompanied by said fees and until applicant has complied with all of the foregoing requirements.

**5-1-2.9 Requirements for issuance of Interim Certificate.**

The Commission shall issue an interim certificate of public convenience and necessity to a person authorizing transportation as a motor carrier subject to the jurisdiction of the Commission if it finds that:

(a) The applicant is fit, willing, and able to provide the transportation to be authorized by the certificate and to comply with regulations of the Commission. Fitness encompasses three factors:

(1) the applicant's financial ability to perform the service it seeks to provide;

(2) its capability and willingness to properly and safely perform the proposed service;

(3) its willingness to comply with the laws of Georgia and the rules and regulations of the Commission; and

(4) in case of application for Limousine certificate only, applicant has not been convicted of any felony as such violation or violations are related to the operation of a motor vehicle.

(b) Service performed during the interim period by applicant will be the basis for issuance of the permanent certificate.

(c) The initial burden of making out a prima facie case that applicant's service is needed, and that it is fit to provide such service, rests with the applicant.

(d) Upon applicant making out a prima facie case as to the need for the service and the carrier's ability to provide the service, the burden shifts to protestant(s) to show that the authority sought would not be consistent with the public convenience and necessity.

**5-1-2.10 Carrier Qualifications for Issuance of Interim Certificate or Transfer of Permanent Certificate.**

(a) When the Commission has given consideration to an application for an interim certificate or transfer of permanent certificate, applicant will be advised in writing of the action thereon. In the event of the approval of the application, applicant shall immediately, and before commencing operation,

(1) register its equipment (See Commission Transportation Rule 8-2.1);

(2) furnish a notarized statement certifying that each vehicle has been properly identified pursuant to Chapters 4 and 8 of these Transportation Rules;

(3) file evidence of insurance pursuant to Chapter 7 of these Transportation Rules;

(4) file tariffs of rates and charges on household goods (See Commission Transportation Rule 5-5-2.5), and fares on passengers to be transported; and,

(5) furnish a statement of awareness of Commission's safety and hazardous material regulations.

(b) In the event applicant does not complete the application by complying with the requirements herein within ninety days from receipt of notice of approval of the application, approval will be automatically withdrawn and fees deposited forfeited.

**5-1-2.11 Application of Passenger Carriers to Abandon Service.**

An application for authority to abandon scheduled passenger bus service, or reduce service to less than one trip per day (excluding Saturday and Sunday), shall include the following exhibits:

**NOTE: If more than one point, route, or route segment is included in the application, the indicated data is to be separately stated for each point, route, or route segment.**

Exhibit 1. Points and Routes Affected

A listing of points, routes, and route segments to be abandoned, including identification and a brief description of any other passenger transportation service available at the points or along the route affected.

Exhibit 2. Maps

Maps to scale showing each point, route, and route segment to be abandoned.

Exhibit 3. Timetables

Copies of current and proposed timetables covering the affected points and routes.

Exhibit 4. Authority

Copies of current and proposed certificate authorities covering the affected points and route.

Exhibit 5. Traffic

Traffic data for a recent representative period, showing numbers of intrastate passengers destined to and originating from each point to be abandoned.

Exhibit 6. Fares and Rates

Description of fares and rates applicable to the affected services.

Exhibit 7. Revenues

Calculation of the passenger, express, and other revenues which accrue as a result of the service to be abandoned, along with an explanation of how the revenues were calculated and of any assumptions underlying the calculations.

Exhibit 8. Operating Statistics

Calculations of route miles, annual bus miles, and schedule operating time to be eliminated for each point, route, or route segment to be abandoned.

Exhibit 9. Additional Evidence

Any additional evidence or legal argument applicant believes to be relevant to the application.

**5-1-2.12 Temporary Emergency Authority.**

(a) Application for Temporary Emergency Authority for the transportation of passengers shall be made on forms, designated by the Commission and supplying in writing all the information called for, by payment of applicable fee, and by complying with the provisions agreed to therein.

(b) The order granting such authority shall contain the Commission's findings supporting its determination under the authority of O.C.G.A.§46-7-13 that there is an unmet immediate and urgent need for such service and shall contain such conditions as the Commission finds necessary with respect to such authority.

(c) Unless otherwise provided such emergency temporary motor carrier authority, unless suspended or revoked for good cause within such period, shall be valid for such time as the Commission shall specify but not for more than an aggregate of 30 days. When a motor carrier granted emergency temporary authority makes application for interim authority corresponding to that authorized in its temporary emergency authority, the temporary authority will be extended to the finalization of the interim authority application unless sooner suspended or revoked for good cause within the extended period.

**5-1-2.13 Refiling for Interim Certificate.**

When an application for an interim certificate has been in whole or in part denied, or has been granted and the order of the Commission granting same has been quashed or set aside by a court of competent jurisdiction, a new application to provide the same service by the same petitioner or applicant for the same commodities will not be again considered by the Commission within three months from the date of the order denying the same or the judgment of the court quashing or setting aside the order.

**5-1-2.14 Transfer of Permanent Certificates.**

Certificates shall not be assigned or transferred or hypothecated through sale, ownership of stock pledged as security, or otherwise; nor shall the control and management of the operation under such certificate be changed through lease or otherwise without authority of the Commission. Interim Certificates are not transferable.

(a) Application for transfers must be made on proper forms and in the manner prescribed by the Commission. Hearings on applications for transfer will be assigned in accordance with the provisions of Commission Transportation Rule 2-1.5. Certificates must be active in order to be considered for transfer.

(b) There shall be attached to the application for transfer of a certificate a copy of the contract of purchase which shall contain a complete statement of the assets of the holder of the certificate to be sold and the amount to be paid therefor, and an affidavit from the holder of the certificate, of the authorized agent or officer thereof, that all accrued taxes and all station rents, wages of employees, and all other known indebtedness incident to said operation have been paid in full except as set out in the application for transfer. If there be unpaid indebtedness incident to said operation, a written itemized statement, under oath, of the names and addresses of all the creditors known to said certificate holder, loss or damage claims, together with the amount of indebtedness claimed to be due or owing each of said creditors incident to said operation shall be included in the application or attached as an exhibit and made a part thereof. There shall also be attached to the application for transfer of a certificate a statement signed and witnessed by the transferee (purchaser), or the authorized agent or officer thereof, guaranteeing the payment of all just obligations listed in the sworn itemized statement of the transferor (certificate holder) included in or made a part of the application for transfer, or any lawful indebtedness not included in the application for transfer where such indebtedness is determined to be incident to said operation.

**5-1-2.15 Reinstatement or Cancellation of Interim or Permanent Certificate.**

After a certificate has been suspended, unless reinstated by the Commission within twelve months from the date of the suspension, same will automatically be canceled and will not be reinstated. A certificate may be reinstated if canceled for lack of proper insurance when the carrier's insurance company files proof of insurance coverage back to the original date of suspension.

**5-1-2.16 Class "B" Interim Certificate Operations.**

Every applicant for a Class "B" Interim Certificate to transport passengers (excluding charter carriers) or household goods shall describe the territory proposed to be served, and shall specify the mileage radius within which it proposes to operate from a base point. No Class "B" Certificate shall authorize the transportation of passengers or household goods unless the applicant has fully complied with the provisions contained in O.C.G.A.§46-7-7 (and O.C.G.A.§46-7-85.4 for limousine carriers).

**5-1-2.17 Misrepresentation of Certificate Operations; Leasing of Certificate Prohibited.**

No certificate holder shall engage in any conduct which falsely tends to create the appearance that services being furnished or operations under such certificate are being provided by the holder when, in fact, they are not. No lease, device or arrangement constituting a leasing, loaning or renting of a certificate will be recognized unless otherwise ordered by the Commission (See Commission Transportation Rule 5-1-2.15).

# TRANSPORTATION RULES
# OF
# GEORGIA PUBLIC SERVICE COMMISSION

## SUBCHAPTER 5-2: HOUSEHOLDS GOODS CARRIERS

### Table Of Contents


| | | | |
|---|---|---|---|
| **5-2-1.1** | **Scope** | **5-2-2.4** | **Package Condition and Preparation** |
| **5-2-1.2** | **Definitions** | **5-2-2.5** | **Prepayment of Charges** |
| **5-2-1.3** | **Penalties** | **5-2-2.6** | **Freight Charges on Lost or Destroyed Shipments** |
| **5-2-2.1** | **Designation of Household Goods Agents** | **5-2-2.7** | **Estimates on Household Goods Moves** |
| **5-2-2.2** | **Advertising** | **5-2-2.8** | **Certified Scales, Weighing Procedures, and Weight Tickets** |
| **5-2-2.3** | **Bills of Lading and Freight Bills** | | |


### 5-2-1.1 Scope.

This subchapter applies to household goods carriers operating in intrastate commerce.

### 5-2-1.2 Definitions.

As used in this subchapter, the term—

*Advertisement* means any communication to the public, in written or printed form, in connection with an offer or sale of any intrastate transportation service (including accessorial services as specified in Commission Transportation Rule 5-2-2.2), but shall not be construed to include listing of a carrier's name, address and telephone number.

### 5-2-1.3 Penalties.

Whenever the Commission, after a hearing conducted in accordance with the provisions of Chapter 2 of the Commission Transportation Rules, finds that any person, firm, or corporation is operating as a household goods carrier for hire without a valid certificate of public convenience and necessity issued by the Commission or is holding itself out as such a carrier without such a certificate in violation of paragraph (b) of O.C.G.A. §46-2-94, the Commission may impose a fine of not more than $5,000.00 for each violation. The Commission may assess the person, firm, or corporation an amount sufficient to cover the reasonable expense of investigation incurred by the Commission. The Commission may also assess interest at the rate specified in O.C.G.A. §46-2-91 on any fine or assessment imposed, to commence on the day the fine or assessment becomes delinquent. All fines, assessments, and interest collected by the Commission shall be paid into the general fund of the state treasury. Any party aggrieved by a decision of the Commission under this rule may seek judicial review as provided in O.C.G.A. §46-2-94.

**5-2-2.1 Designation of Household Goods Agents.**

(a) All appointments of an agent by a carrier holding a permanent certificate shall be evidenced by a contract in writing properly executed by all parties thereto. Such contracts shall set forth the duties, obligations, rights, method of compensation and scope of authority of the parties thereto.

(b) Households goods carriers holding interim certificates may not appoint any agent to operate under their authority.

(c) A standard form contract shall be first submitted to the Commission for approval. If approved, it shall not be necessary to re-submit said standard form of contract except as provided in sub-paragraph (a)(5) of this rule.

(d) The carrier shall notify the Commission in writing at least ten (10) days prior to termination of an agency agreement by filing with the Commission a form entitled "NOTICE OF TERMINATION." Such termination shall become effective on the date provided in the notice unless the Commission notifies the carrier of its disapproval before the effective date.

(e) No carrier shall appoint an agent to represent it if such agent represents another intrastate household goods carrier.

(f) No carrier shall be permitted to appoint an agent for the purpose of transporting household goods in any county or within a twenty (20) mile radius of a city, town or municipality in which it already has an established office or warehouse, or agent. A carrier would not be prohibited from itself performing specialized services in a locality where it has an agent. If carrier establishes an office or warehouse in a location where an agency has been established, the agency agreement must be cancelled.

(g) A copy of the agency contract must be maintained in each vehicle operated by agent under lease to the carrier and a copy of the contract is to be maintained on file both in the carrier's and agent's offices.

(h) Any vehicle operated under authority of the carrier shall be so identified with the carrier's name and other information as required by Commission Transportation Rule 4-1-390.21. The carrier shall purchase a vehicle registration from the Commission in the carrier's name for each vehicle leased to the carrier.

(i) It shall be the responsibility of the carrier to supervise and train all of its agents and the agents' employees in relation to all of the applicable motor carrier safety and hazardous material rules and regulations of the Commission. The carrier shall be responsible to see all the applicable Commission rules and regulations are complied with.

(j) Nothing shall restrict the right of a carrier to appoint agents for booking of household goods only where the hauling of such goods is performed by the carrier or its legally established hauling agents.

(k) Unless otherwise exempted by law, carrier will be responsible to the public for any action of its agents, whether known or unknown, which results in loss or damage to the customers goods, or where overcharge is made.

**5-2-2.2 Advertising.**

(a) Every motor common carrier engaged in the transportation of household goods in intrastate transportation between points in the State of Georgia, including any such carrier providing any accessorial service incidental to or part of such intrastate transportation, shall include, and shall require each of its agents to include, in every advertisement as defined in Transportation Rule 5-2-1.2, the name of the motor carrier under whose operating authority the

advertised service will originate and the certificate number assigned to such operating authority by the Georgia Public Service Commission. The name and certificate number must be the same as designated on the certificate issued by the Commission.

(b) Any person, firm, or corporation who knowingly and willfully issues, publishes, or affixes or causes or permits the issuance, publishing, or affixing of any oral or written advertisement, broadcast, or other holding out to the public, or any portion thereof, that the person, firm, or corporation is in operation as a household goods carrier for hire without having a valid certificate of public convenience and necessity issued by the Commission is guilty of a misdemeanor. Any fine or assessment imposed by the Commission pursuant to the provisions of these Transportation Rules shall not bar criminal prosecution pursuant to the provisions O.C.G.A. § 46-2-94(b).

**5-2-2.3 Bills of Lading and Freight Bills.**

(a) Unless otherwise provided, all motor carriers of household goods shall issue to shippers a bill of lading in the form prescribed, approved and accepted by the Commission. The uniform bill of lading is to be issued in triplicate, and the carrier's copy of said bill of lading shall be retained for a period of three years.

(1) The name of only one shipper, one consignee and one destination shall be shown on one bill of lading. If there are stop offs in transit for partial loading or unloading, the stop off point(s) must also be listed.

(2) A legible copy of the bill of lading must be carried on board the transport vehicle during the time the shipment is in transit.

(3) A single shipment consists of one lot of household goods received from one shipper, at one point, at one time, or for one consignee at one destination and covered by one bill of lading.

(b) On shipments of household goods transported under weight and distance rates, the bill of lading must show the point of origin and destination of said shipment, mileage, weight, rate and total freight charge. Any charges for storage, accessorial charges, special services (third party services) shall be shown separately on said bill of lading.

(c) On shipments of household goods transported under hourly rates, the bill of lading must show the start and stop times of the move, the number of men and vans used, total number of hours worked (less lunchtime and breaks), hourly rate and total freight charge. Any accessorial charges, special services (third party services) shall be shown separately on said bill of lading.

(d) An addendum to the household goods uniform bill of lading (Shipper Declaration of Value) which has been prescribed by the Commission, must accompany the bill of lading. Said addendum is to be executed by the shipper and carrier representative prior to the move. One copy is to be given to shipper and one copy is to be retained at the office of the carrier for a period of three years.

**5-2-2.4 Package Condition and Preparation.**

Unless otherwise provided, household goods will not be accepted for shipment if:

(a) Articles that are not in such condition, or enclosed in containers of such strength and security, or so prepared for shipment, as to render the transportation thereof by motor vehicle reasonably safe and practicable;

(b) Packages containing fragile articles or articles in glass or earthenware must be marked "GLASS" "FRAGILE—HANDLE WITH CARE," or with similar precautionary marks.

(c) Hazardous materials as defined under the Subchapter 4-2 of the Commission Transportation Rules, when tendered for transportation, must conform to the requirements of law and the regulations of the Commission as provided for in Subchapter 4-2 or they must be refused.

**5-2-2.5 Prepayment of Charges.**

All charges must be prepaid or guaranteed on any shipment which in the judgment of the carrier or its agent would not, at forced sale, be worth the total amount of charges which would be due thereon at destination.

**5-2-2.6 Freight Charges on Lost or Destroyed Shipments.**

No motor carrier transporting household goods in intrastate commerce shall collect or require a shipper to pay any published freight charges (including accessorial or terminal services) when a shipment is completely or totally lost or destroyed in transit. A carrier shall collect and the shipper would be required to pay any specific Valuation Charges that may be due. This rule shall not apply to the extent that any such loss or destruction is due to the act or omission of the shipper.

**5-2-2.7 Estimates on Household Goods Moves.**

(a) Motor carriers engaged in the transportation of household goods may provide written estimates of the approximate costs which will be assessed for the transportation of such shipments. Estimates shall be reasonably accurate and shall be furnished without charge and in writing to the shipper or other person responsible for payment of the freight charges. All such estimates shall have clearly indicated on the face thereof that the estimate is not binding on the carrier and that the charges shown are the approximate charges which will be assessed for the services identified in the estimate. The estimate must clearly describe the shipment and all services to be provided. At the time of delivery of a collect on delivery shipment, except when such shipment is being delivered to a warehouse for storage at the request of the shipper, on which an estimate of the approximate costs has been furnished by the carrier, the shipper may request delivery of the shipment upon payment, in a form acceptable to the carrier, an amount not exceeding 110% of the estimated charges. The carrier shall, upon request of the shipper, relinquish possession of the shipment upon payment of not more than 110% of the estimated charges and shall defer demand for the payment of the balance of any remaining charges for a period of 30 days following the date of delivery.

(b) This rule shall not apply on shipments being delivered to a warehouse for storage at shipper's request.

**5-2-2.8 Certified Scales, Weighing Procedures, and Weight Tickets.**

(a) Carriers transporting household goods shipments shall determine the weight of each shipment transported under the Weight and Distance Section of their tariffs prior to the assessment of any charges depending on the shipment weight. Except as otherwise provided in this item the weight shall be obtained on a certified scale designed for weighing motor vehicles, including trailers or semi-trailers not attached to the tractor, and certified by an authorized scale

inspection and licensing authority. A certified scale may also be a platform or warehouse type scale properly inspected and certified.

(b) Except as otherwise provided in this rule, the weight of each shipment shall be obtained by determining the difference between the tare weight of the vehicle on which the shipment is to be loaded prior to the loading and the gross weight of this same vehicle after the shipment is loaded; or, the gross weight of the vehicle with the shipment loaded and the tare weight of the same vehicle after the shipment is unloaded.

(c) At the time of both weigh-ins the vehicle shall have installed or loaded all pads, dollies, hand trucks, ramps and other equipment required in the transportation of such shipments. Neither the driver nor any other persons shall be on the vehicle at the time of either weighing.

(d) The fuel tanks on the vehicle shall be full at the time of each weighing or, in the alternative, no fuel may be added between the two weigh-ins when the tare weighing is the first weighing performed.

(e) The trailer of a tractor-trailer vehicle combination may be detached from the tractor and the trailer weighed separately at each weighing provided the length of the scale platform is adequate to accommodate and support the entire trailer at one time.

(f) Shipments weighing 1,000 pounds or less may be weighed on a certified platform or warehouse scale prior to loading for transportation or subsequent to unloading.

(g) The net weight of shipments transported in containers shall be the difference between the tare weight of the container, including all pads, blocking and bracing used or to be used in the transportation of the shipment and the gross weight of the container with the shipments loaded therein.

(h) The shipper or any other person responsible for payment of the freight charges shall have the right to observe all weighing of the shipment. The carrier must advise the shipper or any other person entitled to observe the weighing of the time and specific location where each weighing will be performed and must give that person a reasonable opportunity to be present to observe the weighing. Waiver by a shipper of the right to observe any weighing or reweighing is permitted and does not affect any rights of the shipper under these regulations or otherwise.

(i) The carrier shall obtain a separate weight ticket for each weighing required under this item except when both weighs are performed on the same scale, one weight ticket may be used to record both weighs. Every weight ticket must be signed by the person performing the weighing and must contain the following minimum information

(1) The complete name and location of the scale,

(2) The date of each weighing,

(3) Identification of the weight entries thereon as being the tare, gross and/or net weight,

(4) The company or carrier identification of the vehicle,

(5) The last name of the shipper as it appears on the bill of lading, and

(6) The carrier's shipment registration or bill of lading number.

(j) The original weight ticket or tickets relating to the determination of the weight of a shipment must be retained by the carrier as part of the file on the shipment. All freight bills presented to collect any shipment charges dependent on the weight transported must be accompanied by true copies of all weight tickets obtained in the determination of the shipment weight.

(k) *Reweighing of shipments.* Before the actual commencement of the unloading of a shipment weighed at origin and after the shipper is informed of the billing weight and total charges, the shipper may request a reweigh. The charges shall be based on the reweigh weight.

# TRANSPORTATION RULES
# OF
# GEORGIA PUBLIC SERVICE COMMISSION

## SUBCHAPTER 5-3: PASSENGER CARRIERS

### Table Of Contents


| | | | |
|---|---|---|---|
| 5-3-1.1 | Applicability | 5-3-2.3 | Tickets |
| 5-3-1.6 | Class "AF" Certificate Operations | 5-3-2.4 | Baggage |
| 5-3-2.1 | Passenger carriers transporting certain types of property | | |
| 5-3-2.2 | Free Transportation | | |


### 5-3-1.1 Applicability.

The rules in this subchapter apply to persons transporting passengers for hire in intrastate transportation in motor vehicles designed to transport more than ten (10) passengers, excluding the driver.

### 5-3-1.6 Class "AF" Certificate Operations.

All "AF" carriers must comply with existing conditions and limitations specified in their certificates. Nothing in this section shall be construed as prohibiting a Class AF certificate holder from obtaining other types of passenger authority as specified in these rules. However, as of August 1, 2000, no new Class AF certificates will be issued by the Commission.

### 5-3-2.1 Passenger carriers transporting certain types of property.

Motor carriers of passengers must obtain either a Passenger Permit or interim Certificate, or both, applicable to their operations. Motor carriers of passengers transporting express, mail and newspapers in the same vehicle with passengers and their baggage, are not required to obtain a Motor Carrier Property Permit and are relieved from the requirements to obtain and maintain cargo insurance for such express, mail and newspapers.

### 5-3-2.2 Free Transportation.

(a) Motor carriers transporting passengers shall not directly or indirectly issue, give, tender or honor, free transportation except during emergency situations or as provided by law, and except to their bona fide officers, agents, employees, and to regularly employed attorneys and dependent members of their families; but may exchange free transportation within the limits of this rule.

(b) Motor carriers transporting passengers may carry any totally blind person accompanied by a guide at the usual and ordinary fare charged to one person.

(c) Motor carriers transporting passengers may carry at reduced rates or free, authorized ministers of the gospel or persons traveling for or representing institutions supported by public subscription or persons dependent upon charity upon such terms and conditions as may be prescribed by the motor carrier and if granted under conditions above enumerated shall apply uniformly to all persons coming into the same class.

(d) Motor passenger carriers may provide free transportation during bona fide emergencies.

**5-3-2.3 Tickets.**

(a) All passenger carriers must provide tickets at all agency stations and at such places indicated on the published time schedules where satisfactory financial arrangements for handling can be made.

(b) All tickets when sold must have the date of same stamped thereon. Tickets when sold shall be redeemable for transportation when presented to the driver of a bus. One-way tickets shall be redeemable at their sale price in money by the company or its agent within sixty days after the sale date stamped thereon and round trip tickets within thirty days; if no date of sale is stamped thereon such tickets shall be redeemable upon presentation at any time by the purchaser accompanied by satisfactory proof of purchase. This rule does not apply to excursion tickets or tickets sold for transportation on special occasions.

(c) Partially used tickets shall be redeemed on basis of difference between the sale price and the lawful fare, from and to the station between which the passenger was actually transported.

**5-3-2.4 Baggage.**

(a) Motor carriers will not be compelled to carry baggage of passengers, except hand baggage, the character, amount, size and value of which the motor carrier may limit by its rules or regulations, subject to the approval of the Commission.

(b) Each passenger motor carrier shall provide duplicate checks for baggage, when requested, to and from all points on all routes covered by its certificate. Baggage checks shall be issued for baggage, when requested, upon presentation of valid transportation only when the owner of the baggage is also the owner of the transportation and is a bona fide passenger over the same line to the destination of the baggage. In the event that the passenger fails to take advantage of this checking service, and the baggage is retained in the physical possession of the owner, the company may proceed on the theory that the passenger has assumed full responsibility for his own baggage, and the company shall not be responsible to the passenger for loss or damage to said baggage. When, however, the passenger is required to surrender physical possession of his hand baggage upon entering the vehicle for storage in a separate compartment from that occupied by the passenger on the vehicle, the motor carrier shall provide duplicate identification tags for such hand baggage, and the motor carrier shall at all times furnish the drivers of its vehicles with an adequate supply of duplicate identification tags.

(c) Excess baggage shall not be transported with charges collect on delivery, but the charges must be paid in advance.

(d) At all agency destinations when arriving baggage is not immediately claimed by the passenger owner, the driver shall deliver same to the station agent and if delivered to owner on same date of arrival, no storage charge shall be made.

(e) Baggage containing money, jewelry, negotiable paper, liquids, glassware, perishable or fragile articles, must not be checked or received for transportation without a declared valuation and where such declared value exceeds the value provided for in paragraph (g) carriers may assess additional charges according to tariffs filed with and approved by the Commission. If baggage is checked or delivered for transportation by a passenger without making manifest of such contents and the value thereof, the carrier shall not be liable therefor in excess of the amount provided for in paragraph (g) and may reject entirely when baggage contains any of the

articles enumerated in paragraph (h), or is in the opinion of the operator or driver, too heavy, bulky, fragile, or not in proper condition.

(f) Subject to the limitations and conditions set forth herein three pieces of hand baggage, not to exceed a total weight of one hundred pounds nor exceeding two hundred fifty ($250.00) dollars in value, shall be carried free of charge for each adult passenger. Children traveling on less than adult fare shall be limited on the above basis in the proportion that the child's fare bears to the adult fare. No allowance shall be permitted on tickets purchased for the sole purpose of avoiding the payment of excess baggage.

(g) Motor carriers of passengers, their drivers or their agents, shall not knowingly permit, and no person shall offer for transportation, any dangerous substance or material to be loaded in or upon any passenger carrying vehicle or to be stored as baggage in or upon the premises of any passenger bus station, which shall include the following but is not limited to the following:

(1) Loaded firearms;

(2) Illegal narcotics, dangerous drugs, or controlled substances;

(3) Materials of an offensive or disagreeable odor; or,

(4) Any hazardous material or article prohibited to be transported aboard a passenger carrying vehicle provided for under 49 C.F.R. § 177.870.

This rule does not apply to law enforcement officers carrying firearms.

# TRANSPORTATION RULES
# OF
# GEORGIA PUBLIC SERVICE COMMISSION

## SUBCHAPTER 5-4: LIMOUSINE CARRIERS

### Table Of Contents


| | | | |
|---|---|---|---|
| 5-4-1.1 | Applicability | 5-4-2.4 | Annual Inspection |
| | | 5-4-2.5 | Identification of Luxury Limousines |
| 5-4-2.1 | Limousine For Hire. Filing of Schedules | 5-4-2.6 | Motor Carrier Safety Regulations – Luxury Limousines |
| 5-4-2.2 | Certificates of Public Convenience and Necessity | 5-4-2.7 | Suspension, Cancellation or Revocation of Certificate |
| 5-4-2.3 | Chauffeur Permits and Requirements | 5-4-2.8 | Luxury Limousine Temporary Permits |
| | | 5-4-2.9 | Limousine Tariffs |


### 5-4-1.1 Applicability.

The rules in this subchapter apply to persons operating limousines, as defined in Commission Transportation Rule 3-1.5 for hire within this state in intrastate transportation.

### 5-4-2.1 Limousine For Hire.

No limousine carrier shall operate any limousine for the transportation of passengers for compensation on any public highway in this state except in accordance with the provisions of federal laws, state laws and Commission rules.

### 5-4-2.2 Interim Certificates of Public Convenience and Necessity.

No person may engage in the business of a limousine carrier over any public highway in this state without first having obtained from the Commission an Interim Certificate of Public Convenience and Necessity to do so.

An interim certificate shall be issued to any qualified applicant, provided that such applicant is a limousine carrier business domiciled in this state, authorizing the operations covered by the application if it is found that the applicant is fit, willing, and able to perform properly the service and conform to the provisions of O.C.G.A. §46-7-85 and the rules and regulations of the Commission and has not been convicted of any felony as such violation or violations are related to the operation of a motor vehicle.

### 5-4-2.3 Chauffeur Permits and Requirements.

The rules and regulations listed in this Subchapter and Subchapter 4-4 are the minimum requirements set forth by the Georgia Public Service Commission for chauffeur's permits for operators of luxury limousines.

(a) Every chauffeur employed by a limousine carrier shall have his or her chauffeur's permit in his or her immediate possession at all times while operating a limousine. Said permit shall be displayed in the limousine so that it is visible to any law enforcement officer. A $15.00 fee shall accompany all applications for a chauffeur's permit. The chauffeur's permit shall be valid for two calendar years.

(1) Chauffeur applicants must be at least 18 years of age.

(2) Must possess a valid Georgia driver's license which must have been held for a minimum of one year prior to application.

(3) Must pass a criminal background check in accordance with the provisions of O.C.G.A. §46-7-85.10(3)(A).

(4) Must present two (2) color passport photos.

(5) Must have letter from limousine carrier which driver represents (on stationery with company's letterhead) showing proof of employment with said carrier.

(6) A chauffeur's permit will only be valid while a person is in the employment of the limousine carrier for whom they were employed when application for a chauffeur's permit was made.

(7) A chauffeur's permit may be suspended if the bearer is charged with, and may be revoked if the bearer is convicted of, any of the offenses listed in O.C.G.A.§46-7-85.10(3)(A) or it is found that the bearer gave false information on his/her application.

(8) The chauffeur's permit shall not be valid for the operation of a luxury limousine unless on the vehicle being operated there is a valid uniform cab card issued by the Georgia Public Service Commission for the company operating the limousine at that time.

(b) A chauffeur's permit issued under this subsection shall be upon a form prescribed by the Commission and bear the following:

(1) Permit number;

(2) The full name and a photograph of the permittee;

(3) Date of birth;

(4) Company name;

(5) Company address; and

(6) Issue date and expiration date.

**5-4-2.4 Annual Inspection.**

(a) All luxury limousines must be inspected annually by personnel designated by the Georgia Public Service Commission for compliance of the safety rules in Subchapter 4-4 of the Commission Transportation Rules and upon compliance have a safety decal affixed by the inspector. The fee for each inspection shall be $15.00 (cashier's check or money order made payable to the Georgia Public Service Commission).

(b) Any carrier that schedules a limousine inspection and does not provide at least 24 hours notice to the Georgia Public Service Commission of its inability to appear for its appointment will be assessed a $50.00 per vehicle fee on the first occasion that carrier fails to appear. A $100.00 per vehicle fee will be assessed the second time that a carrier fails to either appear for a scheduled inspection appointment or to provide at least 24 hours notice of its need for a cancellation.

(c) Any carrier that fails to appear for a scheduled inspection or to provide at least 24 hours notice of its need to cancel a scheduled appointment on three or more occasions shall be subject to disciplinary action by the Georgia Public Service Commission.

(d) Any fee assessed for a carrier's failure to appear for an inspection or to provide timely notice of cancellation shall be in addition to the regular inspection fee.

(e) In addition to meeting the safety requirements every luxury limousine shall meet the identification requirements in Rules 4-4-390.21 and 5-4-2.5.

**5-4-2.5 Identification of Luxury Limousines.**

Prior to operating luxury limousines over the highways of Georgia for which registration and licensing of such equipment has been made, every motor carrier holding a certificate to transport passengers in luxury limousines shall affix to the front bumper a standard size license plate with the following information:

(a) Limousine company name;
(b) City and state of principal domicile;
(c) Company telephone number; and
(d) Vehicle classification - IE-1.

**5-4-2.6 Motor Carrier Safety Regulations - Luxury Limousines.**

Luxury limousines must comply with all safety rules and regulations as provided for in Subchapter 4-4 of the Commission's Transportation Rules.

**5-4-2.7 Suspension, Cancellation or Revocation of a Certificate of Public Convenience and Necessity.**

The Commission may cancel, revoke, or suspend any interim or permanent certificate issued under this chapter as provided in Commission Transportation Rule 2-3.1 and O.C.G.A.§46-7-85.7.

**5-4-2.8 Luxury Limousines Temporary Permits.**

(a) The rules and regulations listed below in this part are the minimum requirements set forth by the Georgia Public Service Commission for issuance of temporary permits to limousine carriers.

(b) A limousine carrier may obtain a temporary permit for a period of 21 consecutive days beginning and ending on the dates specified on the face of the permit. Temporary permits shall be obtained by limousine carriers which make only infrequent trips within or through the State of Georgia and comply with the following:

(1) Pay a fee for each temporary permit in the amount of $100.00 per week and $20.00 for each vehicle.
(2) Meet the insurance requirements of the Commission.
(3) Obtain a chauffeur's permit for each operator.
(4) A temporary permit shall be carried in the motor vehicle for which it was issued at all times such vehicle is in this state.

**5-4-2.9 Limousine Tariffs.**

The rates and charges which are published in the Commission's Limousine Maximum Rate Tariff shall be the rates which all motor carriers of passengers operating in luxury limousines, under appropriate certificates, will be required to adhere to. These rates are maximum and limousine carriers will be permitted to charge any rate(s) less than the published maximum.

# TRANSPORTATION RULES
# OF
# GEORGIA PUBLIC SERVICE COMMISSION

## SUBCHAPTER 5-5: RATES AND TARIFFS

### Table Of Contents


**5-5-1.1 Applicability**

**5-5-2.1 Rates and Fares Apply in Both Directions**

**5-5-2.2 Method for Determining Distances Related to rates or Fares**

**5-5-2.3 No Change in Rates, Fares, Charges, or Service**

**5-5-2.4 Rate Schedules**

**5-5-2.5 Tariffs**

**5-5-2.6 Procedures for Collective Rate Making**


### 5-5-1.1 Applicability.

The rules in this subchapter are general provisions relating to rates and tariffs and apply to all motor carriers required to hold Certificates of Public Convenience and Necessity, except limousine carriers. Specific rates and tariff provisions which apply only to household goods or passenger carriers separately are provided for in their respective subchapters.

### 5-5-2.1 Rates and Fares Apply in Both Directions.

All rates and fares effective in this State, except in cases where otherwise specified, shall apply in either direction, over the same line, between the same points.

### 5-5.2.2 Method for Determining Distances Relating to Rates or Fares.

(a) Unless otherwise authorized by the Commission, rates or fares shall be charged and computed by using the distances shown in either—

(1) The Commission's Highway Rate Basis Numbers (Distances) Table No. 3, supplements thereto or reissues thereof;

(2) Household Goods Carriers' Bureau Mileage Guide No. 17, supplements thereto or reissues thereof; or,

(3) Southern Motor Carriers Rate Conference, Inc. ProMiles Mileage Calculation Program or reissues thereof.

(b) Unless otherwise authorized by the Commission, the carrier shall select one of the above listed mileage guides, and make reference in the rate tariff to the one selected as the governing publication for rate-making distances. Where the carrier's tariff refers to the—

(1) Household Goods Carriers' Bureau Mileage Guide No. 17 or

(2) Southern Motor Carriers Rate Conference, Inc. ProMiles software mileage calculation program for distances,

the carrier must be a party to that Mileage Guide.

**5-5-2.3 No Change in Rates, Fares, Charges, or Service.**

(a) No change shall be made by any carrier transporting household goods or passengers (hereinafter referred to as "carrier") subject to the jurisdiction of the Public Service Commission in any rate, fare, charge, or service or in any rule or regulation relating thereto, except after proper notice to the Commission and to the public, as prescribed below, unless the Commission otherwise orders, or has previously approved the same. Such notice shall be given by filing with the Commission and keeping open for public inspection new schedules stating plainly the change(s) to be made and the time when they shall take effect.

(b) The Commission shall have the authority, either upon written complaint or upon its own initiative without complaint, to conduct a hearing on lawfulness of such rate, fare, charge, or service. Pending such hearing and the decision thereon, the Commission, may suspend the operation of such schedule and defer the use of such rate, fare, charge, or service, by notifying the carrier in writing of the reason for suspension, but not for a longer period than five (5) months from the proposed effective date of the publication. The Commission may make such orders as are proper with references thereto within the authority vested in the Commission. The Commission is empowered to reduce or revoke any such suspension with respect to all or any part of such schedule. If the proceeding has not been concluded and an order made at the expiration of the suspension period, the proposed change of rate, fare, charge, or service shall go into effect at the end of the suspension period.

(c) Notwithstanding other provisions of this Rule and Commission Transportation Rule 5-5-2.4, the Commission, **EXCEPT** for the transportation of household goods:

(1) Shall not suspend or investigate a motor passenger carrier's proposed decrease in a rate, fare or charge on the basis of the level of such rate, fare or charge, unless it appears to the Commission on its own initiative or by a complaint that such decrease will result in unjust discrimination, constitute a predatory competitive practice or impose an unreasonable burden on intrastate commerce. In the case of a complaint, the burden of proof shall be on the complaining party to prove the allegations made;

(2) Shall, unless otherwise ordered by the Commission, require 15 days notice for the filing of decreases and 20 days notice for the filing of increases in carrier rates, fares or charges;

(3) Shall require only one days notice by motor passenger carriers for reductions published to meet the competition of already published rates, fares or charges of other carriers.

(d) Any increase in **household** goods carriers rates and charges must be filed with the Commission on not less than thirty days notice. Any reduction in rates and charges which are published to meet competition's existing rates and charges may be filed on less than the thirty days notice.

**5-5-2.4 Rate Schedules.**

(a) All schedules of rates, fares and charges for the transportation of passengers or household goods charged by motor carriers operating under certificates shall be approved or prescribed by the Commission.

(b) All rules, regulations and schedules applicable to household goods and passenger carriers shall be prescribed by the Commission.

(c) Motor carriers of household goods operating under certificates may publish and file tariffs with the Commission thirty days in advance of the effective date thereof, effecting

changes in the said rates, fares, charges, rules or regulations and such tariffs shall, unless rejected by the Commission prior to the said effective date, be deemed to be approved by the Commission subject to complaint and further order; provided, however, that the filing of such tariffs with the Commission shall not be construed as an approval of any of the rates, fares or charges, rules or regulations which advance a charge or decrease a service, which change was not previously authorized by the Commission. Initial tariffs, rules, etc., when filed with an application for a Certificate of Public Convenience and Necessity to begin operations shall, unless rejected, be deemed to be approved by the Commission effective as of the date that such certificate is issued.

(d) When on the transportation of shipments paid for by the United States, the State of Georgia, or any county or municipality or other governmental subdivision of the State of Georgia, motor carriers are required to publish only maximum rates or charges and are permitted to charge lower than the published maximum.

(e) All tariff publications covering Georgia intrastate traffic shall conform in general style and make-up to the form prescribed by the Commission.

(f) Changes in rates, charges, rules, regulations, etc., shall be symbolized and such explanation thereof made in the tariff as will indicate the character of the change.

(g) All tariffs shall bear at the top of the first or title page a G.P.S.C. number, and tariffs shall be numbered consecutively. Where any tariff cancels a previously filed tariff such cancellation shall be shown immediately following the number of the tariff.

**5-5-2.5 Tariffs.**

(a) All motor carriers of household goods or passengers (except carriers operating under maximum tariffs issued by the Commission) operating under a certificate shall publish and file tariffs of rates and charges and rules and regulations governing same, subject to approval and on such form as prescribed by the Commission.

(b) All tariffs, rules and regulations shall be accessible and subject to public inspection.

(c) *Tariffs to be Kept Posted.* Each motor carrier of passengers shall keep conspicuously posted at all of its stations, offices and agencies in Georgia, a copy of the schedules and rates or fares prescribed by the Commission. When any change is made in such schedule, either by a carrier voluntarily, or pursuant to an order of the Commission, the carrier shall immediately post copies thereof, as notice to the public, in the same manner as above specified, and furnish copy of said change to the office of the Commission.

**5-5.2.6 Procedures for Collective Rate-Making.**

(a) No person, tariff publishing agent, bureau or association (hereinafter referred to, collectively, as "tariff publishing agent") shall engage in collective rate-making activities unless and until said tariff publishing agent submits in writing to the Commission, for approval, its procedures for the docketing and handling of proposed prescribed rates. Such procedures shall, at a minimum, embrace the following essential elements:

(b) A reasonable and fair method whereby any interested party may propose a change in the rates or rules in a tariff published by a tariff publishing agent for consideration and vote by the participants to said tariff.

(c) The providing of notice to all participants in and subscribers to a tariff proposed to be changed regarding the proposal; said notice shall also fix a date, time and place for public

hearing on the proposal whereby any interested party may appear at such hearing to give evidence or arguments in support of or in opposition to said proposal.

(d) A method whereby notice of rate proposals shall be available to anyone desiring same, including members of the public, upon payment of a reasonable subscription fee, except that such notice shall be mailed to all participants to the tariff without charge.

(e) Carrier participants to a tariff published by a tariff publishing agent may elect a rate committee for each type of carrier group to review proposed changes, to recommend as to the disposition of proposals, and to otherwise direct the affairs of their group, such as for the employment of counsel to handle petitions for rate changes, and for the direction of their tariff publishing agents in connection with docketing, tariff publications and other necessary routine requirements.

(f) Proposals for changes in tariffs, published by an agent for participating carriers as authorized by powers of attorney to the agent, shall be submitted in writing to the agent, or as may otherwise be directed by a governing rate committee. Meetings at which the public docket is to be considered will be called upon not less than ten (10) days' notice to the Committee and to the public.

(g) Each committee member will have one vote and the majority of the votes cast will govern. Proxy voting shall not be allowed.

(h) Formal minutes (not verbatim transcripts) must be kept on all meetings whereat collective rate-making matters are considered.

(i) A tariff publishing agent shall not, as such, file a protest with the Commission against any proposed tariff change.

(j) The procedures herein authorized may be utilized by motor carriers to develop combined financial data as to operating expenses, revenues and estimated projections related thereto, for analysis and for submission to the Commission as and when required.

(k) Nothing herein shall be construed to authorize the publication of any rate or tariff rule that is unlawful or otherwise prohibited by regulation of the Commission. Except when published to comply with the order of the Commission, all tariffs and amendments thereto will be subject to complaint by an interested party and may be suspended or rejected by the Commission.

# TRANSPORTATION RULES
# OF
# GEORGIA PUBLIC SERVICE COMMISSION

## SUBCHAPTER 5-6: REVENUE AND EXPENSE REPORTS

### Table Of Contents

5-6-1.1 Applicability
5-6-2.1 Motor Carrier Revenue and Expense Reports

### 5-6-1.1 Applicability.

The rules in this subchapter apply to household goods carriers.

### 5-6-2.1 Motor Carrier Revenue and Expense Reports.

On or before April 15th of each year, households goods carriers shall file on forms prescribed by the Commission an annual report of operations for the preceding year (annual reports must reflect the revenue from January 1 through December 31) showing assets and liabilities, revenues, and expenses of operation and other information required. Also, all carriers are required to keep and maintain a record showing the total number of miles operated in the State of Georgia.

# TRANSPORTATION RULES
# OF
# GEORGIA PUBLIC SERVICE COMMISSION

## CHAPTER 6: PERMITTED CARRIERS

### Table Of Contents


**6-1.1 Applicability**
**6-1.3 Penalties**
**6-1.5 Definitions**

**6-2.1 Registration Permits**
**6-2.2 Motor Carrier of Passenger Permits**
**6-2.3 Motor Carrier of Property Permits**
**6-2.4 Qualifications for Issuance of Property or Passenger Permits**
**6-2.5 Class "IE" Permit Operations**
**6-2.6 Discontinuance of Service**
**6-2.7 Intercorporate Carrier**
**6-2.8 Single State Registration Program Reinstatement or Cancellation of Permit**


### 6-1.1 Applicability.

The provisions in this chapter apply to all for hire motor carriers that are required to hold Permits under the Motor Carriers Acts of this state.

### 6-1.3 Penalties.

(a) *Criminal penalty.* In addition to any other penalty imposed by law, violations of any provision of this chapter shall constitute a misdemeanor, pursuant to O.C.G.A. §46-2-93 and §46-7-39.

(b) *Civil penalty.* In addition to any other penalty imposed by law, violations of this chapter shall be subject to the provisions of O.C.G.A. §46-2-91.

### 6-1.5 Definitions.

As used in this chapter the term—

*Corporate family* means a group of corporations consisting of a parent corporation and all subsidiaries in which the parent corporation owns directly or indirectly a 100 percent interest.

### 6-2.1 Registration Permits.

Before any motor carrier transports persons or property for hire in interstate commerce, specifically exempt from the economic jurisdiction of the Federal Motor Carrier Safety Administration, said carrier shall first make application for a registration permit on forms prescribed by the Commission and pay a filing fee of $25.00.

### 6-2.2 Motor Carrier of Passenger Permits.

Before any motor carrier of passengers in charter service shall operate any motor vehicle in intrastate commerce, the carrier shall first secure a registration permit from the Commission by making application on form supplied by the Commission and pay a filing fee of $50.00.

**6-2.3 Motor Carrier of Property Permits.**

Before any motor carrier of property shall operate any motor vehicle in intrastate commerce, it shall first secure a registration permit from the Commission by making application on forms prescribed by the Commission and pay a filing fee of $50.

**6-2.4 Qualifications for Issuance of Property or Passenger Permits.**

(a) A carrier applying for a motor carrier of property or passenger permit must demonstrate compliance with the laws of Georgia, and the rules and regulations of the Commission regarding insurance, safety, and hazardous materials. The Commission may refuse to issue a permit where the applicant has failed to show compliance. The applicant, upon request made in writing, shall be entitled to a hearing to protest said denial.

(b) The Commission may, at any time after notice and an opportunity to be heard, suspend, revoke, alter, or amend any permit issued under these rules, if the holder of the permit has violated or refused to observe any lawful and reasonable orders, rules, or regulations prescribed by the Commission, any of the applicable provisions of Title 46 O.C.G.A., or any other law of this State regulating or taxing motor vehicles.

**6-2.5 Class "IE" Permit Operations.**

Before any motor carriers of passengers (10 or less, except limousines) operate any motor vehicle in intrastate commerce, it shall first secure a registration permit from the Commission by making application on forms prescribed by the Commission and pay a filing fee of $25.00.

**6-2.6 Discontinuance of Service.**

Upon thirty day's notice any motor carrier operating under a permit issued by the Commission may suspend or abandon service immediately by surrendering their permits for cancellation and returning to the Commission all licenses issued thereunder.

**6-2.7 Intercorporate Carrier.**

(a) Motor carriers may engage in compensated intercorporate hauling whereby transportation of property is provided by a person who is a member of a corporate family for other members of such corporate family provided:

(1) The parent corporation notifies the Commission of its intent or one of the subsidiaries' intent to provide the transportation;

(2) The notice contains a list of participating subsidiaries and an affidavit that the parent corporation owns directly or indirectly a 100 percent interest in each of the subsidiaries;

(3) A copy of the notice is carried in the cab of all vehicles conducting the transportation; and,

(4) The transportation entity of the corporate family register the compensated intercorporate hauling operation with the Commission by obtaining a motor carrier of property permit, file evidence of liability insurance coverage, register and identify its vehicle(s), and become subject to the Commission's motor carrier safety and hazardous materials transportation rules and regulations.

**6-2.8 Single State Registration Program.**

Motor carriers engaged in interstate commerce within the borders of this state under authority issued by the Federal Motor Carrier Safety Administration shall comply with provisions of the Single State Registration Program as provided for in Commission Transportation Rule 8-2.3.

**6-2.9 Reinstatement or Cancellation of Permit.**

After a permit has been suspended by the Commission within twelve months from the date of the suspension, same will automatically be canceled and will not be reinstated.

# TRANSPORTATION RULES
# OF
# GEORGIA PUBLIC SERVICE COMMISSION

## CHAPTER 7: MOTOR CARRIER INSURANCE

### Table Of Contents


**7-1.1 Applicability**
**7-1.3 Penalties**

**7-2.1 Public Liability and Property Damage Insurance**
**7-2.2 Cargo Insurance**
**7-2.3 Qualification as a self-insurer**
**7-2.4 Qualified insurance and minimum requirements**
**7-2.5 Retention of insurance filings and surety bonds**
**7-2.6 Forms and Procedure**
**7-2.7 Revocation**


### 7-1.1 Applicability.

This chapter describes the requirements for insurance or other surety required for motor carriers engaged in intrastate, interstate, or foreign commerce.

### 7-1.3 Penalties.

(a) *Criminal penalty.* In addition to any other penalty imposed by law, violations of any provision of this chapter shall constitute a misdemeanor, pursuant to O.C.G.A. §46-2-93 and §46-7-39.

(b) *Civil penalty.* In addition to any other penalty imposed by law, violations of this chapter shall be subject to the provisions of O.C.G.A. §46-2-91.

### 7-2.1 Public Liability and Property Damage Insurance.

(a) No certificate or permit shall be issued or continued in operation unless the applicant or holder shall give and maintain bond, with adequate security, for the protection, in case of passenger vehicles, of the passengers and baggage carried and of the public against injury proximately caused by the negligence of such motor common or contract carrier, its servants, or its agents. In cases of vehicles transporting freight, the applicant or holder shall give bond, with adequate security, to secure the owner or person entitled to recover therefore against loss or damage to such freight for which the motor common or contract carrier may be legally liable and for the protection of the public against injuries proximately caused by the negligence of such motor carrier, its servants, or its agents.

(b) The commission shall approve, determine, and fix the amount of such bonds and shall prescribe the provisions and limitations thereof; and such bonds shall be for the benefit of and subject to action thereon by any person who shall sustain actionable injury or loss protected thereby.

(c) The commission may, in its discretion, allow the filing of a certificate of insurance on forms prescribed by the commission, in lieu of such bond, evidencing a policy of indemnity insurance in some indemnity insurance company authorized to do business in this state, which policy must substantially conform to all of the provisions of this article relating to bonds. The insurer shall file such certificate. The failure to file any form required by the commission shall

not diminish the rights of any person to pursue an action directly against a motor carrier's insurer.

(d) The commission shall have power to permit self-insurance, in lieu of a bond or policy of indemnity insurance, whenever in its opinion the financial ability of the motor carrier so warrants.

(e) It shall be permissible under this rule for any person having a cause of action arising under this rule in tort or contract to join in the same action the motor carrier and its surety, in the event a bond is given. If a policy of indemnity insurance is given in lieu of bond, it shall be permissible to join the motor carrier and the insurance carrier in the same action, whether arising in tort or contract.

(f) The liability of the insurance or bonding company on each motor vehicle for the following minimum limits shall be a continuing one notwithstanding any recovery hereunder:

**SCHEDULE OF LIMITS**

| Kind of equipment | Limit for bodily injury to or death of one person: | Limit of bodily injuries to or death of all persons injured or killed in any one accident (subject to a maximum of $100,000 for bodily injuries to or death of one person): | Limit for loss or damage in any one accident to property of others (excluding cargo): |
|---|---|---|---|
| Passenger equipment (seating capacity): | | | |
| 12 passengers or less | $100,000.00 | $300,000.00 | $50,000.00 |
| Over 12 passengers | $100,000.00 | $500,000.00 | $50,000.00 |
| Freight equipment: All motor vehicles used in the transportation of property (see Note) | $100,000.00 | $300,000.00 | $50,000.00 |

**NOTE: Motor Carriers transporting hazardous materials, hazardous substances or hazardous waste in interstate, intrastate or foreign commerce refer to U.S. Code of Federal Regulations, Title 49, §387.9 for schedule of limits.**

**7-2.2 Cargo Insurance.**

(a) Except as otherwise provided by law no motor carrier transporting household goods by motor vehicle required to hold a certificate from the Commission shall engage in intrastate commerce, nor shall any certificate be issued to such carrier, nor remain in force unless and until there shall have been filed with and approved by the Commission a surety bond, policy of insurance (or certificate of insurance in the form prescribed herein in lieu thereof), qualifications as a self-insurer, or other securities or agreements in not less than the amounts hereinafter prescribed, conditioned upon such carrier making compensation to shippers or consignees for all property belonging to shippers or consignees and coming into the possession of such carrier in

connection with its transportation service within the boundaries of the State of Georgia, regardless of whether such motor vehicle is described in the policy or not.

(b) Within the limits of liability hereinafter provided it is further required that no condition, provisions, stipulation, or limitation contained in the policy, or any other endorsement thereon or violation thereof, or of this rule by the insured, shall affect in any way the right of any shipper or consignee, or relieve the insurance or bonding company from liability for the payment of any claim for which the insured may be held legally liable to compensate shippers or consignees, irrespective of the financial responsibility or lack thereof or insolvency or bankruptcy of the insured. However, all terms, conditions, and limitations in the policy are to remain in full force and effect as binding between the insured and the insurance or bonding company.

(c) The liability of the insurance or bonding company for the following minimum limits shall be a continuing one notwithstanding any recovery hereunder:

| | |
|---|---|
| For loss of or damage to property carried on any one motor vehicle ..... | $5,000.00 |
| For loss of or damage to aggregate of losses or damage of or to property occurring at any one time and place..... | $10,000.00 |

**7-2.3 Qualification as a Self-Insurer.**

(a) *Intrastate motor carrier*.

(1) Where application is made by an intrastate motor carrier, on forms to be supplied by the Commission, to qualify as a self-insurer under the provisions of O.C.G.A. §46-7-12, the Commission will give consideration to the application if such motor carrier furnishes a current income statement for a one year period and a balance sheet certified by an independent certified public accountant; a schedule showing for each of the last five years the premiums paid, bodily injury claims and expenses, property damage claims and expenses, total incurred losses and the loss ratio; income statements and balance sheets for each of the last five fiscal years and other evidence which will establish to the satisfaction of the Commission the ability of such motor carrier to satisfy its obligation for bodily injury liability, property damage liability or cargo liability without affecting the stability or permanency of the business or such motor carrier.

(2) If the Commission determines that a cash reserve account is necessary to protect the public, such motor carrier shall establish and maintain an account in the amounts equal to prescribed limits of liability and/or cargo (as appropriate) as defined in Commission Transportation Rules 7-2.1 and 7-2.2 and maintain such an account in accordance with instruction from the Commission.

(3) In the event that the Commission grants to a motor carrier authority to self-insure in accordance with the procedures prescribed by the Commission. Such motor carrier shall furnish quarterly to the Commission a balance sheet, income statement within forty-five (45) days after the end of the reporting period, and such other information as the Commission may require.

(b) *Interstate motor carrier*. Where application is made by an interstate motor carrier to qualify as a self-insurer, the Commission will give consideration to the application if such motor carrier furnishes the following:

(1) Copy of application to the Federal Motor Carrier Safety Administration seeking authority to self-insure with all accompanying information.

(2) Copy of the Federal Motor Carrier Safety Administration order granting self-insurance.

(3) Copy of safety rating of the Federal Motor Carrier Safety Administration.

(4) Statement of willingness to furnish copies of any and all reports required by the Federal Motor Carrier Safety Administration.

(5) Statement that carrier will advise immediately of cancellation or self-insurance by the Federal Motor Carrier Safety Administration.

**7-2.4 Qualified Insurance and Minimum Requirements.**

Each certificate of insurance provided by these rules covering bodily injury liability; property damage liability and cargo liability filed with the Commission for approval must be for not less than the full limits of liability required under these rules and regulations and in each case the insurance company must be legally authorized to transact business in the State of Georgia.

**7-2.5 Retention of Insurance Filings and Surety Bonds.**

Certificates of insurance when filed with and accepted by the Commission are public documents and after cancellation or expiration shall be retained in the files of the Commission for a period of not less than two years or such longer time as may be deemed necessary for the protection of the insured.

**7-2.6 Forms and Procedure.**

(a) Certificates of insurance evidencing coverage shall be written in the full and correct name of the individual, partnership, corporation, or other person to whom the certificate, permit, or license is now or is to be issued. In case of a partnership all partners shall be named.

(b) Certificates of insurance evidencing coverage shall be continuous and shall not be canceled or withdrawn until after thirty (30) days' notice in writing by the insurance company, surety or sureties, motor carrier, or other party thereto, as the case may be, has first been given to the Commission at its offices in Atlanta, Georgia, which period of thirty days shall commence to run from the date such notice is actually received at the office of the Commission. Upon receipt of the notice, original stamped copy will be retained in the files of the Commission as evidence of the date of cancellation thereof and attached to the certificate of insurance or the surety bond. Except that the Commission will waive the required thirty (30) days' notice where a motor carrier elects to substitute a certificate of insurance evidencing coverage for insurance previously filed by a different insurance company where such substituted certificate is accompanied by an affidavit of the motor carrier that substitution has been authorized by the motor carrier and that waiving of the thirty (30) days' notice is requested for the purpose of avoiding the payment of double insurance premium.

(c) *Forms.*

(1) *Form E.* Uniform motor carrier bodily injury and property damage liability certificate of insurance shall be in "Form E" prescribed by the Commission.

(2) *Form H.* Uniform motor carrier cargo certificate of insurance shall be in "Form H" prescribed by the Commission.

(3) *Form K.* Uniform notice of cancellation of motor carrier insurance policies shall be in "Form K" prescribed by the Commission.

**7-2.7 Revocation.**

The Commission may revoke its approval of any certificate of insurance, qualification as a self-insurer, or other securities or agreements if it finds at any time such security no longer complies with these rules.

# TRANSPORTATION RULES
# OF
# GEORGIA PUBLIC SERVICE COMMISSION

## CHAPTER 8: MOTOR VEHICLES

### Table Of Contents


| | | | |
|---|---|---|---|
| **8-1.1** | **Applicability** | **8-3.1** | **Leasing of Motor Vehicles - General** |
| **8-1.3** | **Penalties** | **8-3.2** | **Single source leasing** |
| **8-2.1** | **Vehicle Registration** | **8-4.1** | **Vehicle Identification – General** |
| **8-2.2** | **Vehicle Identification Cab Cards** | **8-4.2** | **Vehicle Identification of lightweight commercial vehicles.** |


### 8-1.1 Applicability.

The provisions of this chapter apply to all for hire motor vehicles operating within, into, or through the State of Georgia.

### 8-1.3 Penalties.

(a) *Criminal penalty.* In addition to any other penalty imposed by law, violations of any provision of this chapter shall constitute a misdemeanor, pursuant to O.C.G.A. §46-2-93 and §46-7-39.

(b) *Civil penalty.* In addition to any other penalty imposed by law, violations of this chapter shall be subject to the provisions of O.C.G.A. §46-2-91.

(c) *Late Registration.* Any motor carrier operating a vehicle or vehicles over the highways of this State under a certificate or permit issued by the Commission without having first obtained the annual vehicle registration stamp shall be required to pay a fee of twenty-five dollars ($25.00) for late registration of such vehicle.

### 8-2.1 Vehicle Registration.

(a) Every for hire motor carrier operating pursuant to a Certificate or Permit, shall annually on or before the thirty-first day of December of each calendar year, but not earlier than the preceding first day of October, or as to any motor vehicle put into use during the course of the year, before the vehicle is put into use, make application to the Commission on such forms as the Commission may prescribe, for the issuance of an annual identification and registration stamp or stamps to be affixed to Vehicle Identification Cab Card, for registration of all motor vehicles (including vehicles operated in driveaway service) to be operated under such certificate or permit, and shall pay to the Commission a fee of $5.00 for the registration of each vehicle and issuance of identification and registration stamp to operate same. Each annual identification and registration stamp shall be valid for a period of 16 months extending from the first day of October of any year through the thirty-first day of January of the next succeeding year. The Vehicle Identification Cab Card shall be in the form prescribed by the Commission (Form G for intrastate operations and Form D-1 for interstate exempt operations). This rule shall include all vehicles used to pick-up or deliver persons or property which are operated incident to the motor carrier business conducted under certificates or permits issued by the Commission.

(b) Application for registration and licensing of all motor vehicles shall be made on the forms prescribed by the Commission, which shall be typewritten or written legibly with pen and

ink. Cashier's Check, Certified Check or U.S. Postal Money Order or Express Money Order payable to the Georgia Public Service Commission must accompany the equipment registration form.

(c) The registration fee for each vehicle for a year or a portion of a year is $5.00. No refund will be made on registrations surrendered for cancellation. Under no circumstance will the Commission issue a license until carrier is properly qualified with the Commission. Prior to operating a vehicle within the borders of the State of Georgia, each motor carrier shall place one of such identification stamps in the appropriate space provided for on the Vehicle Identification Cab Card (Form G or D-1, as appropriate) in such manner that the same cannot be removed without defacing it. The motor carrier shall thereupon duly complete and execute the form of certificate printed on the front of the Vehicle Identification Cab Card (Form G or D-1) so as to identify itself and such vehicle.

(d) The Vehicle Identification Cab Card shall be maintained in the cab of such vehicle for which prepared whenever the vehicle is operated under the authority of the carrier identified in the cab card. A Vehicle Identification Cab Card shall, upon demand, be exhibited by the driver to any authorized agent or representative of the Georgia Public Service Commission or any law enforcement officer.

(e) Carriers holding multiple classes of certificates or permits shall only be required to pay one registration fee per vehicle operated. Carriers which hold certificates or permits and also hold operating authority from the Federal Motor Carrier Safety Administration and are registered under the Single-State Registration System (SSRS) pursuant to Commission Transportation Rule 8-2.3, are not required to obtain registration and identification stamps under this rule, provided they have paid registration fees for all of their vehicles operated within the borders of this state and a copy of such SSRS receipt is carried upon each vehicle operated within the borders of this state.

(f) Any motor carrier operating a vehicle or vehicles over the highways of this State under a certificate or permit issued by the Commission without having first obtained the annual vehicle registration stamp shall be required to pay a fee of twenty-five dollars ($25.00) for late registration of such vehicle.

(g) Georgia Public Service Commission vehicle registrations must be displayed in conformance with Commission instructions and Commission enforcement officers or other authorized personnel are directed to repossess all vehicle registrations found on vehicles other than for which issued and return such registrations to the office of the Commission for such disposition as the Commission may, in its discretion, direct.

(h) The vehicle registration and identification stamps issued under the provisions of this rule and the Identification Cab Cards prepared therefor, shall become void on the first day of February in the succeeding year to the year for which issued unless such registration is terminated prior thereto.

(i) Vehicle registration and identification stamps will not be issued until such motor carriers are in full compliance with the Commission's qualification requirements.

**8-2.2 Vehicle Identification Cab Cards.**

Form G (intrastate) Vehicle Identification Cab Cards shall be furnished by the Commission with the vehicle registration and identification stamps. Form D-1 (interstate exempt) Uniform Identification Cab Cards may be obtained from the National Association of

Regulatory Utility Commissioners, 1101 Vermont Avenue, N.W, Suite 200, Washington, D.C. 20005, Telephone (202) 898-2200 Facsimile (202) 898-2213, at a cost of 50¢ each.

**8-2.3 Single State Registration.**

The single state registration rules and regulations of the Georgia Public Service Commission are the minimum requirements for all motor carriers engaged in interstate commerce in Georgia, and to the extent that they do not conflict with Georgia law; and where applicable are the same as the Single State Registration requirements issued by the U. S. Department of Transportation, Federal Motor Carrier Safety Administration, contained in Title 49 Part 367 of the Code of Federal Regulations, and as amended. Motor carriers operating within Georgia under certificates of permits issued by the Federal Motor Carrier Safety Administration or former Interstate Commerce Commission must register under this program with the Georgia Public Service Commission or another participating state.

**8-3.1 Leasing of Motor Vehicles—General.**

(a) All vehicles operated by a certificated and/or permitted carrier under term, trip or rental lease arrangements must, before such vehicle is placed into service by the lessee, be registered with the Commission in the name of the lessee under the provisions of Commission Transportation Rule 8-2.1 or Commission Transportation Rule 8-2.3; All vehicles operated by a for hire or private carrier under term, trip or rental lease arrangements must, before vehicle is placed into service by the lessee be identified in the carrier's name as provided for in Commission Transportation Rule 4-1-390.21 or Commission Transportation Rule 8-4.1; be operated at all times during the term of the lease under the exclusive control, supervision and direction of the lessee who is solely responsible for the qualification of the vehicle with the Commission and all matters incidental to the operation of the vehicle while under lease. A copy of the lease agreement must be carried on the leased vehicle at all times during the term of the lease agreement, in addition to all other provisions, must include at a minimum the following:

(1) The full names and addresses of the leasing parties.

(2) A complete description of each vehicle involved.

(3) Provision that the sole possession, responsibility and control of each vehicle for the entire term of the lease is to reside with the lessee.

(4) Provisions that the vehicle will at all times be operated to the exclusive direction and supervision of the lessee.

(5) A statement of the amount of compensation to be paid for use of the vehicle while held under lease and the method by which same is to be determined.

(6) A statement of the term of the lease and conditions of renewal, if any.

(b) The above lease provisions shall not authorize or permit a motor carrier to lease a vehicle(s) from a lessor where the lessor retains substantial control of the daily operations of such vehicle(s) while under lease; such control shall include, but not be limited to, such things as billing; compliance with applicable safety and hazardous materials regulations, including maintenance of driver records; driving vehicle by person not an employee or bona fide agent of lessee; providing payment to any other lessors for services rendered for lessee; settlement of claims; provision of insurance required by the Commission; or assumption of any responsibility or liability to the public normally held by the Commission to be those of the lessee. The delegation of such responsibilities by lessee to lessor is prohibited.

(c) Lessor may be responsible for selecting, purchasing, financing, and maintaining its equipment; payment of all operating expenses, including all expenses of fuel, oil, tires, lubricants, service and repairs to the equipment; tolls, ferries, road taxes, mileage taxes, fuel taxes, fines for moving, parking or weight violations, base plates, licenses, permits or any other levies of assessments based upon the operation of the equipment; and any and all of lessor's activities performed other than that performed under the lease agreement.

(d) Notwithstanding the foregoing, any for hire or private carrier (lessee) shall be responsible for ensuring that all equipment leased to it is properly maintained and operated in compliance with the Commission's motor carrier safety and hazardous material rules, and regularly inspected. The drivers of leased or rented vehicles are considered employees of the lessee for the purpose of compliance with the Commission's safety and hazardous material rules.

(e) Carriers actively engaged in the transportation of household goods under certificated authority issued by the Commission are permitted to lease vehicles pursuant to the above conditions. This includes vehicles (owned, leased or rented) of agents of household goods carriers whose appointments have been approved by the Commission to operate under the carrier's authority pursuant to Commission Transportation Rule 5-2-2.1.

(f) No motor carrier holding household goods authority from the Commission, who is not actively engaged in the transportation of household goods, is permitted to lease vehicles for the purpose of transporting household goods under the carrier's certificated authority, unless said vehicles are operated pursuant to provisions of paragraph (e).

**8-3.2 Single Source Leasing.**

Single source leasing, whereby a leasing company whose primary business is leasing vehicles and who operates a fleet of ten or more vehicles provides vehicle equipment and drivers in a single transaction to a private carrier, is presumed to result in private carriage by the shipper if the requirements enumerated below are met and subject only to the Commission's transportation safety rules:

(1) The lease must be reduced to writing and a copy maintained on the leased vehicle at all times during the term of the lease;

(2) The period for which the lease applies must be no less than 30 days;

(3) The lease agreement must provide, and the surrounding facts must reflect, that the leased equipment is exclusively committed to the lessee's use for the term of the lease;

(4) The lease agreement must provide, and the surrounding facts must reflect, that during the term of the lease the lessee accepts, possesses, and exercises exclusive dominion and control over the leased equipment and assumes complete responsibility for the operation of the equipment;

(5) The lessee must maintain public liability insurance and accept responsibility to the public for any injury caused in the course of performing the transportation service conducted by the lessee with the equipment during the term of the lease;

(6) The lessee shall display appropriate identification on all equipment leased by it showing operation by the lessee during the performance of the transportation;

(7) The lessee must accept responsibility for, and bear the cost of, compliance with safety and hazardous material regulations during performance by the lessee or any such transportation services; and

(8) The lessee must bear the risk of damage to the cargo, subject to any right of action the lessee may have against the lessor for the latter's negligence.

**8-4.1 Vehicle Identification - General.**

(a) *Applicability.* The rules in this section and section 8-4.2 specify the identification markings required to be displayed on self-propelled motor vehicles under the jurisdiction of the Commission.

(b) *General Identification requirements.* Except for those vehicles described in Rule 8-4.2 below, the motor vehicle identification requirements are contained in Commission Transportation Rules 4-1-390.21, and 4-3-390.21

**8-4.2 Vehicle Identification of Lightweight Commercial Vehicles.**

(a) Except as provided for in paragraph (c) and (d) of this rule, every self-propelled motor vehicle with a G.V.W.R. of *10,000 lbs. or less* as described in paragraph (b) of this rule shall have painted, stenciled, or otherwise durably marked on both sides of the body or cab of each vehicle to be put into use, in letters and figures in sharp color contrast to the background and of such size, shape and colors as to be readily legible during daylight hours from a distance of 50 feet while the vehicle is not in motion, and such display shall be kept and maintained in such manner as to remain so legible, the following information:

1. (1) Legal name (or doing business as name);
2. (2) Principle place of domicile (nearest city and state); and,
3. (3) Their assigned FMCSA or ICC MC Number or assigned USDOT number.

(Item 3 required only if operating under authority issued by the FMCSA or ICC.)

(b) This rule shall apply to lightweight commercial vehicles which are:

(1) Operated by a for hire motor carrier and used to transport property or passengers for which a certificate, property permit, passenger permit, registration permit, or single state registration receipt is required; or,

(2) Operated by private carriers and are used to transport hazardous materials in quantities *not requiring* placarding.

(c) Passenger car type automobiles used for hire for the transportation of passengers (commonly known as towncar service) operated by carriers required to hold a permit from the Commission shall have affixed to the front bumper a tag or plate painted, stenciled, or otherwise durably marked in letters and figures in sharp color contrast to the background and of such size, shape and colors as to be readily legible during daylight hours from a distance of 50 feet while the vehicle is not in motion, and such display shall be kept and maintained in such manner as to remain so legible, the following information:

(1) Legal name (or doing business as name);
(2) Principal place of domicile (nearest city and state); and,
(3) Telephone Number (including area code).

(d) *Limousines.* Limousines used by a carrier required to hold a certificate from the Commission shall be identified in accordance with Commission Transportation Rule 4-4-390.21.

# TRANSPORTATION RULES
# OF
# GEORGIA PUBLIC SERVICE COMMISSION

## CHAPTER 9: HAZARDOUS MATERIAL TRANSPORTATION REQUIRING SPECIAL PERMITS AND/OR LETTERS OF INTENT

### Table Of Contents

**9-1.1 Applicability**
**9-1.3 Penalties**
**9-1.5 Definitions**

**9-2.1 Permit exceptions, requirements, restrictions, and letters of intent**
**9-2.2 General Conditions**
**9-2.3 Notification**
**9-2.4 Letters of intent, applications, and permit fees**
**9-2.5 Emergencies**

**9-1.1 Applicability**.

The rules in this chapter apply to the transportation of certain hazardous materials within or through the State of Georgia, and to all persons who transport, ship, or offer such materials for transportation.

**9-1.3 Penalties.**

(a) *Criminal penalty.* In addition to any other penalty imposed by law, violations of any provision of this chapter shall constitute a misdemeanor, pursuant to O.C.G.A. §46-2-93 and §46-11-4.

(b) *Civil penalty*. In addition to any other penalty imposed by law, violations of this chapter shall be subject to the provisions of O.C.G.A. §46-2-91 and §46-11-4.

**9-1.5 Definitions.**

In this chapter, the term—

*Act* means the Transportation of Hazardous Materials Act, Act 394, Georgia Laws of 1985, as codified at O.C.G.A. Title 46, Chapter 11.

*Carrier* means any person engaged in the transportation of liquefied natural gas (LNG), polychlorinated biphenyl (PCB), and radioactive materials.

*Code of Federal Regulations* means the United States Code of Federal Regulations, and as they may be amended from time to time in the Federal Register.

*Department of Natural Resources* means the Georgia Department of Natural Resources.

*Exclusive Use Vehicle* means a vehicle designed or used exclusively for transporting hazardous materials, or any vehicle, which due to requirements based on the nature of a particular commodity being transported, is restricted to transporting only that commodity in the shipment.

*Hazardous Materials* means radioactive materials, liquefied natural gas (LNG), and polychlorinated biphenyl (PCB).

*Liquefied natural gas or LNG* means natural gases with high methane content shipped and packaged as a cryogenic (refrigerated) liquid, listed as “methane, refrigerated liquid” or “natural gas, refrigerated liquid” in Title 49 CFR §172.101.

*Nuclear Regulatory Commission* means the United States Nuclear Regulatory Commission.

*Person* means any individual, corporation, partnership, association, state, municipality, political subdivision of a state, any agency or instrumentality of the United States government or any other entity, and includes any officer, agent, or employee of any of the above.

*Polychlorinated biphenyl or PCB* means the same material listed and described in Title 49 CFR §172.101 and its appendices.

*Radioactive (Class 7) material* means the same as the term used in Title 49 CFR §173.403.

*Shipment* means the material carried on any single transport vehicle or single combination (articulated) vehicle.

*Shipper* means any person who arranges for, provides for, solicits a carrier for, consigns to a carrier for, or contracts with a carrier for shipment or transport of goods or property. The terms "shipper" and "offeror" are synonymous.

*Title 10 CFR* or *10 CFR* means Title 10 of the United States Code of Federal Regulations, and as it may be amended from time to time in the Federal Register.

*Title 49 CFR* or *49 CFR* means Title 49 of the United States Code of Federal Regulations, and as it may be amended from time to time in the Federal Register.

**9-2.1 Permit Exceptions, Requirements, Restrictions, and Letters of Intent.**

(a) *Exceptions.* Neither permits nor letters of intent shall be required for the following:

(1) Empty packagings that meet the requirements and limitations of Title 49 CFR §173.428;

(2) Limited quantities of radioactive materials that meet the requirements and limitations of Title 49 CFR §§173.421, 173.422, 173.423, 173.424, 173.425, and 173.426, as applicable;

(3) Weaponry or other classified commodities when being moved on government owned vehicles by the U.S. Department of Energy or U.S. Department of Defense, when under direction and escorted by personnel of or under the authority of those agencies; or,

(4) Non-bulk packagings of liquefied natural gas.

(b) *Permit requirements.* Permits are required for:

(1) Each bulk shipment of liquefied natural gas (LNG);

(2) Each shipment of polychlorinated biphenyl (PCB); and/or

(3) Each shipment of radioactive materials which:

(i) is required to be transported on an exclusive use vehicle;

(ii) are spent (used) fuels;

(iii) have a Transportation Index (TI) in excess of 50;

(iv) is a Highway Route Controlled Quantity, as defined in 49 CFR §173.403;

(v) are more than 5,000 curies of any "Special Form" material; or,

(vi) any material for which notification to a Governor or designee is required pursuant to Title 10 CFR.

(c) *Permit restrictions.* (1) No trip permit shall be issued authorizing in excess of five (5) travel days (in Georgia) for the movement specified.

(d) *Letters of intent.* Letters of intent are required for all carriers of radioactive materials not requiring a permit as specified in paragraph (b) above. Such carriers shall initially, and annually thereafter, declare in writing to the Georgia Public Service Commission its intent to

transport, or continue to transport, radioactive materials within or through the State, furnishing the following information:

(1) Name and address of the carrier;

(2) Name(s), address, and telephone number(s) of the individual(s) in charge of and responsible for the movement;

(3) The number of packages, all nuclides, and approximate total activities (in appropriate S.I. units) of all radioactive materials to be transported in Georgia, and the estimated number of trips to be conducted during the period;

(4) Annual report showing the actual number of packages, all nuclides, and approximate total activities (in appropriate S.I. units) of all radioactive materials transported during the preceding year in or through Georgia.

(5) A legible copy of the current letter of intent, stamped receipt acknowledged, must be carried in the vehicle when transporting radioactive materials in Georgia, and displayed immediately upon demand of any Commission representative.

**9-2.2 General Conditions.**

(a) *General*. In addition to any specific requirements set forth in the Act or these Rules, all hazardous materials shall be packaged, marked, labeled, handled, loaded, unloaded, stored, detained, transported, placarded, and monitored in compliance with Title 49 CFR.

(b) *Federal and state laws and regulations.* Compliance shall be maintained with applicable laws and regulations of the United States and the State of Georgia including, but not limited to, those of the U.S. Department of Transportation, Georgia Public Service Commission, Georgia Department of Natural Resources, Georgia Department of Revenue, Georgia Department of Transportation, and their successor agencies, and Title 46 O.C.G.A.

(c) *Route of travel.* Routing shall comply with 49 CFR Part 397 Subparts C and D, as applicable.

(d) *Atlanta restrictions.* No permit shall be valid for travel into or through the area bounded by Interstate 285 (the bypass around the City of Atlanta) unless the vehicle is making a pickup or delivery within this area. The driver in instances of this kind must be able to show proof of such pickup or delivery.

(e) *Non-transfer of Trip Permit.* No person may use a trip permit for any vehicle which is not owned or leased by such person. In addition, the trip permit shall be carried in the vehicle to which it refers.

(f) *Original annual permit to be carried.* Where annual permit is obtained, original of the annual permit must be carried in vehicle.

(g) *Liability insurance and other security.* Public Liability and Property Damage insurance shall be maintained during the existence of a permit in at least the minimum amounts required by the Federal Department of Transportation for motor carriers transporting hazardous materials. The carrier requesting a permit shall furnish along with its application a certificate of insurance showing the name of the insurance carrier, the policy number, the amounts of coverage, and the effective dates of the coverage. Carrier will take whatever action necessary to ensure that its insurance carrier furnishes the Commission notice of any changes in its insurance coverage at least thirty (30) days prior to the effective date.

Where changes in insurance coverage are made and the carrier fails to notify the Commission of such changes or fails to furnish the Commission evidence of new insurance coverage prior to date of cancellation, carrier's permit is canceled on date of insurance

cancellation and any movement subsequent to such cancellation date will be considered in violation of the laws of Georgia and the rules and regulations of the Commission.

(h) *Damages.* Nothing contained herein shall be construed so as to make the Commission responsible or liable for any damage caused by vehicle permitted to transport hazardous materials. The person receiving the permit certifies to hold the Commission harmless from all claims and to recompense the Commission, the Department of Transportation, or any political subdivision for any expenditures made to repair damages caused by the permitted vehicle or the commodity being transported.

(i) *Cost Recovery.* In the event of any incident involving hazardous materials, covered by these rules, regardless of type, quantity, or form, in transport or in storage in this State which causes, or threatens to cause a hazardous materials discharge, or undue radiation, or any other type exposure to any individual, the State may recover from any shipper, carrier, or any other responsible person, the costs incurred by the State for activities related to the prevention, abatement, and mitigation of the consequences of such an incident.

(j) *Oversize and overweight conditions.* The provisions of these rules in no way exempt the movements of hazardous materials covered by these rules from the requirements for securing oversize and overweight permits when applicable from the Georgia Department of Transportation.

(k) *Records.* Any shipper or carrier of hazardous materials shall make its records and any supporting documentation concerning such shipments available to the Commission for inspection immediately upon request.

(l) *Limitations.* For just cause, including, but not limited to, repeated and consistent past violations, the Commission may refuse to issue, or may cancel, suspend, or revoke the permit of an applicant or permittee.

**9-2.3 Notification.**

(a) *Prior Notification.* For shipments of radioactive material for which pre-notification of a Governor or designee is required by Title 10 CFR, such notification shall be made to the Director, Transportation Division, Georgia Public Service Commission, 1007 Virginia Avenue, Suite 310, Hapeville, Georgia, 30354-1325. No prior notification shall be required for any other type of hazardous materials.

(b) *Radioactive materials.* For shipments of radioactive materials which the carrier desires escort pursuant to the physical security requirements of Title 10 CFR, the carrier must contact the Enforcement Division at 404-559-6627 during normal business hours at least seven days in advance of such shipment. The Commission is under no obligation to provide escort or other physical protection, and assumes no liability and makes no guarantee of a particular degree of protection or safety.

(c) *Incident notification.* If at anytime an incident or accident occurs, the driver or carrier shall immediately contact the Commission, and give all facts available concerning the nature of the occurrence, including time and location. Notification may be made directly to the Commission, or to the State Emergency Spill Number at 1-800-241-4113 and asking that the Commission be notified of the incident.

**9-2.4 Letters of Intent, Applications, and Permit Fees.**

(a) *Letters of Intent.*

(1) Letters of Intent to move hazardous materials as defined in 9-2-1.1(d) shall be addressed to the Georgia Public Service Commission, Transportation Division, Suite 310, 1007 Virginia Avenue, Hapeville, Georgia 30354.

(2) No fee is required for the submittal of, or subsequent movement(s) made of hazardous material(s) as described under a letter of intent.

(b) *Permits.*

(1) Applications for permits and permit fees shall be addressed to the Georgia Public Service Commission, Transportation Division, Suite 310, 1007 Virginia Avenue, Hapeville, Georgia 30354.

(2) *Permit Fees.* The fees for hazardous materials permits shall be $100.00 for annual permits, and $25.00 for a single trip permit. Such fee shall accompany the permit application, and may be made by money order, certified check or cashier's check. Checks and money orders shall be made payable to the Georgia Public Service Commission.

(c) *Permit Procedures.*

(1) *Single trip permit.* An application for a single trip permit may be made by telephone, by letter, or in person, giving the applicable information required, including the name of the person(s) in the organization who is the primary contact for information or action with regard to any movement or emergency situation. The permit fee shall be transmitted to the Georgia Public Service Commission prior to the issuance of the permit. The Georgia Public Service Commission, as requested in the application, may use any of the following methods to transmit a single trip permit to the applicant:

(i) Facsimile transmission;

(ii) Mail; or,

(iii) Presentation in person.

(2) *Annual Permit.* An application for an annual permit shall be made in writing on the application form prescribed by the Commission. The executed application shall be signed and notarized. Upon approval of the application and payment of the prescribed fee, the Commission shall transmit the permit by mail or present it to the applicant in person, if requested by the applicant. Any person submitting an application for a Hazardous Materials permit shall include as an attachment to the application, an Emergency Action Plan which shall include as a minimum, the phone number and make of the person and alternate in their organization who is the primary contact for information or action with regard to any movement or emergency situation; an estimate of the number of trips and types and quantities of hazardous materials to be transported per trip; general information as to the origins, destinations, and a history of actual movements for the preceding three month period.

**9-2.5 Emergencies.**

(a) In case of a bona fide emergency (such as an accident or spill), where the transportation of any hazardous material required by this chapter to have a permit or letter of intent must take place to immediately protect life, health or property, such transportation may take place without the required permit or letter of intent subject to the provisions of this section. Economic hardship or failure to obtain a permit in a timely manner prior to routine transportation shall not be considered bona fide emergencies.

(b) In emergency situations, shippers and carriers shall comply with all other applicable safety practices and regulations.

(c) As soon as possible after the emergency movement, but within one business day, the carrier shall obtain a permit or submit a letter of intent as required by this chapter.

(d) The applicant for a post-emergency movement permit or letter of intent shall submit supporting documents as follows:

(1) Copy of the shipping papers and/or hazardous waste manifest used for the movement;

(2) Any incident reports that are available, including police, fire and insurance company reports;

(3) Incident number issued by the National Response Center, if applicable;

(4) Name and complete addresses of any agency, contractor, or other person who performed any clean-up or remediation; and

(5) A notarized letter explaining the need for the emergency movement, declaring that the movement was necessary to protect life, health or property, and the following declaration: "I hereby certify, under penalty of perjury, that the statements herein are to the best of my knowledge, true and correct."

# TRANSPORTATION RULES
# OF
# GEORGIA PUBLIC SERVICE COMMISSION

## CHAPTER 10: CIVIL PENALTIES

### Table of Contents


**10-1.1 Applicability, including purpose**
**10-1.3 Definitions**
**10-1.6 Commission Authority**
**10-2.1 Reporting of Violations**
**10-2.2 Notice of Hearing**
**10-2.3 Consent Agreement in lieu of Formal Hearing**
**10-2.4 Respondent's Failure to Appear**
**10-2.5 Enforcement of Commission Order**
**10-2.6 Payment of Civil Penalties**


### 10-1.1 Applicability, including purpose.

The purpose of these regulations is to enable the Commission to determine whether any motor carrier or other persons subject to the jurisdiction of the Commission has failed to comply with any provision or requirement of laws or regulations issued thereunder. If such violation(s) is (are) found, the Commission will issue an appropriate order to compel compliance with the law or regulations, assess a civil penalty, or both.

### 10-1.3 Definitions.

As used in this Chapter, the term—

*Consent Order* means an order voluntarily entered into between a Respondent and the Commission's designated representative for purposes of resolving allegations that the Respondent violated Commission laws, rules and/or the Federal Motor Carrier Safety Regulations.

*Motor Carrier Safety Regulations* mean any safety or hazardous material regulations that have been promulgated by the Commission pursuant to Chapters 4 and or 9 of the Commission's Transportation Rules.

*Notice of Hearing* means the official documentation issued by the Commission's Transportation Division to a Respondent in which allegations are made that the Respondent has violated Commission laws, rules and/or the Federal Motor Carrier Safety Regulations.

*Transportation Division* means the Transportation Division of the Georgia Public Service Commission.

### 10-1.6 Commission Authority.

Consistent with O.C.G.A.§§40-8-2, 46-1-1(7)(C)(x) and (13)(A), 46-2-91, 46-2-94(a), 46-7-2, 46-7-26, 46-7-27, 46-7-37, 46-7-85.1 *et seq.*, and 46-11-1 *et seq.*, the Commission is authorized to create and establish regulations detailing the procedures that will be employed when its Transportation Division determines that a motor carrier or other person(s) has (have) committed safety, fitness or other regulatory violations.

**10-2.1 Reporting of Violations.**

Any person having statutory authority to take enforcement action with respect to a violation of one or more of the Commission's laws, rules and/or the Federal Motor Carrier Safety or Hazardous Material Regulations may transmit a report of the violation to the Staff of the Transportation Division. The report shall be made on forms produced by the Commission or shall be set forth or contain substantially the same information called for on such forms. Whenever practicable, the report should include any documentary, photographic or other evidence which has been collected regarding the violation.

**10-2.2 Notice of Hearing.**

(a) A Notice of hearing setting forth alleged violations of the Commission's laws and rules and/or Motor Carrier Safety and Hazardous Material Regulations shall be served upon the Respondent in person or by certified mail, return receipt requested and, where appropriate, shall specify any procedures available to the Respondent to resolve pending allegations on an informal basis.

(b) At a minimum, the Notice of Hearing shall include:

(1) A statement of the time, place, and nature of the hearing.

(2) A statement of the legal authority and jurisdiction under which the hearing will be held;

(3) A reference to the particular section of the statutes and rules involved;

(4) A short and plain statement of the matters asserted. In the event the Commission Staff is unable to state the matters in detail at the time, the Notice may be limited to a statement of the issues involved. Thereafter, upon application, a more definite and detailed statement shall be furnished; and

(5) Notice of the amount being claimed, and notice of the maximum amount authorized to be claimed under O.C.G.A.§46-2-91;

(6) A statement as to the right of any party to subpoena witnesses and documentary evidence through the agency.

(7) The name and telephone number of the appropriate Unit Director of the Commission's Transportation Division as the point of contact for any request to settle.

(c) Opportunity shall be afforded all parties to be represented by legal counsel at their own expense and to respond and present evidence on all issues involved.

(d) Informal disposition of the matters alleged in a Notice of Hearing may be made by settlement agreement or consent order.

(e) The Commission may delegate to a hearing officer any of its authority to preside over any matter brought pursuant to these rules. The hearing officer shall be authorized to conduct a hearing and perform any functions related thereto. Decisions of such hearing officers shall have the same effect as decisions of the Commission; provided however that any party to a proceeding who is aggrieved by a decision of the hearing officer shall have the right of appeal from such decision. Such appeal must be made in writing and filed with the appropriate Unit Director of the Commission's Transportation Division within ten days after its receipt. Such appeals will be handled in accordance with Commission Transportation Rule 2-1.8.

(f) In proceedings for collection of civil penalties for violations of the Commission's laws and rules and/or Motor Carrier Safety and Hazardous Materials Regulations, the Commission may require the carrier to post notice of hearing in such place or places and for a specified duration as may be determined appropriate to aid in the enforcement of laws or regulations.

**10-2.3 Consent Agreement in Lieu of Formal Hearing.**

(a) Where appropriate, consent agreements may be arrived at by considering the nature, circumstances, extent, and gravity of the violation(s) alleged and, with respect to the Respondent, the degree of culpability, history of prior offenses, ability to pay based on carrier's size, gross revenues and other resources, and willingness to comply with laws and rues and such other matters as is deemed appropriate.

(b) Consent agreement may include, but are not limited to, provisions specifying civil penalties; additional training or education; the purchase of equipment or materials to aid in compliance; submission of documentation as evidence of compliance; and an agreement to cease and desist from practices that are not consistent with public safety and welfare.

(c) Any informal consent agreement that may be reached by the Transportation Division and the Respondent shall not be effective unless and until it is accepted by the Commission. In the event that the Commission does not accept a proposed Consent Agreement, no statement made therein shall be deemed admissible in a subsequent hearing.

**10-2.4 Respondent's Failure to Appear at Hearing.**

A Respondent's failure to appear at the hearing shall constitute a waiver of the Respondent's right to contest the alleged violation(s) made in the Notice of Hearing. The Commission or its designee shall be authorized, without further notice or hearing, to make findings and may forthwith order the imposition of sanctions, including the assessment of an appropriate civil penalty.

**10-2.5 Enforcement of Commission Order.**

If, within 30 days after the service of an order assessing civil penalties and other sanctions, the Respondent has failed to pay the assessed civil penalty and take the corrective action contemplated by the Commission or has failed to file an appeal and obtain a stay as contemplated in O.C.G.A.§46-2-91(c), the case shall be referred to the Attorney General's Office with a request that an appropriate action to collect the penalty and interest be brought in Fulton County Superior Court.

**10-2.6 Payment of Civil Penalties.**

(a) Civil penalties shall be paid by certified check, cashier's check or money order made payable to the Georgia Public Service Commission, and shall be mailed or delivered to:

Director, Transportation Division
Georgia Public Service Commission
Transportation Division
1007 Virginia Avenue, Suite 310
Hapeville, Georgia 30354

The instrument of payment shall contain the identifying case number for which payment is being tendered. Payment is complete upon receipt by the staff of the total amount of assessment.

(b) If the only remedy requested with respect to a violation is payment of a civil penalty, full payment under these circumstances constitutes an admission of the occurrence of the violation for purposes of consideration of a respondent's history of violations in determining the appropriate remedy for any future violation(s).

# TRANSPORTATION RULES
# OF
# GEORGIA PUBLIC SERVICE COMMISSION

## CHAPTER 11: RAILROAD COMPANIES

### Table of Contents

**11-1.1 Applicability**
**11-2.1 Railroad Accident Reports**
**11-2.2 Railroad Reporting Forms**
**11-2.3 Railroad Information to be Furnished**

### 11-1.1 Applicability.

The rules in this chapter apply to each railroad company operating within the State of Georgia.

### 11-2.1 Railroad Accident Reports.

(a) Each railroad company in this State shall notify the Georgia Public Service Commission as early as practicable, but within twenty-four after the happening thereof, by electronic filing, facsimile, telephone or written communications, of each derailment, collision or train accident of any character, occurring on its lines or at its terminals, within this State, which results in injury to persons, or property damage exceeding $6,000.

(b) Each railroad company in this State is required to submit copies to the Georgia Public Service Commission of the accident/incident and injury/illness reports filed with the Federal Railroad Administration under Title 49 CFR, Part 225 on incidents that occur in the State of Georgia. These reports shall be filed within thirty (30) days after expiration of the month during which the incident occurred.

### 11-2.2 Railroad Reporting Forms.

All of said reports required in this rule shall be rendered on, and in accordance with, printed forms prescribed by the Commission; and all reports of operations should show revenues derived from operations intrastate within the State of Georgia and that portion of the interstate revenues allocated to State operation.

### 11-2.3 Railroad Information To Be Furnished.

In addition to the foregoing, each of said companies shall furnish such other reports and information as the Commission may require from time to time.

# Index


**Certificated Carriers.....90**
Application Fees ..... 93
Free Service Forbidden..... 92
General Provisions ..... 91
Interim Certificate Application ..... 93
Leasing of Certificate..... 97
Limousine Carriers ..... 106
Misrepresentation..... 97
Passenger Carriers ..... 103
Penalties ..... 91
Rates and Tariffs..... 109
Revenue and Expense Reports ..... 113
Transfer of Permanent Certificate ..... 96
**Civil Penalties ..... 133**
Applicability..... 133
Commission Authority ..... 133
Enforcement of Commission Order ..... 135
Payment..... 135
**General Rules.....10**
Civil Penalties generally ..... 16
Criminal Penalties generally ..... 17
Definitions ..... 10
Fraud..... 15
Jurisdiction of the Commission..... 10
Operations in same Name as Certificate or Permit ..... 15
Process Agent..... 16
Rules, Application..... 10
**Georgia Forest Products Trucking Rules .....*See* subheading under "Safety and Hazardous Materials Rules"**
**Hazardous Materials**
Hazardous Materials Driving and Parking Rules. 41
Regulations..... *See* Subchapter 4-2
**Hazardous Materials Permits..... 127**
Applications..... 131
Exceptions..... 128
Fees ..... 131
General Conditions..... 129
Insurance..... 129
Letter of Intent ..... 128
Notification of Commission ..... 130
Penalties ..... 127
Routing..... 129
**Household Goods .....98**
Advertising..... 99
Bills of Lading ..... 100
Claims for Loss..... 92
Claims for Overcharge..... 92
Designation of Agent..... 99
Estimates ..... 101
Lost or Destroyed Shipments, Freight Charges.. 101
Penalties ..... 98
Weighing..... 101
**Insurance..... 117**
Applicability..... 117
Cargo ..... 118
Forms and Procedure ..... 120
Hazardous Materials Permits..... 129
Penalties ..... 117
Property Damage ..... 117
Public Liability..... 117
Qualified Insurance..... 120
Retention of Records..... 120
Revocation..... 121
Schedule of Minimum Limits..... 118
Self-Insurance Qualification..... 119
**Intercorporate Carriage .....*See* subheading under "Permitted Carriers"**
**Letter of Intent .....*See* "Hazardous Materials Permits"**
**Limousine Carriers**
Annual Inspection..... 107
Chauffeur Permits..... 106
Safety Regulations....*See* subheading under "Safety and Hazardous Materials Rules"
Tariffs ..... 108
Temporary Permits ..... 108
**Limousine Safety Rules .....*See* subheading under "Safety and Hazardous Materials Rules"**
**Motor Vehicles..... 122**
Cab Cards..... 123
Identification ..... 126
Identification, Lightweight Vehicles..... 126
Leasing , Generally ..... 124
Leasing, Single Source (Intrastate)..... 125
Penalties ..... 122
Penalty, Late Registration..... 122
Registration with the Commission ..... 122
Safety.....*See* Chapter 4
**Organization**
Chairman..... 1
Director, Transportation Division..... 4
Director, Utilities Engineering ..... 3
Director, Utlities Financial Analysis ..... 3
Executive Director..... 2
Executive Secretary ..... 2
Fiscal and Budget Officer ..... 3
Hearing Officers ..... 3
Official Reporter..... 3
Personnel Officer..... 3
Transportation Enforcement Personnel..... 4
Vice-Chairman..... 2
**Passenger Carriers**
Baggage..... 104
Free Transportation..... 103

# Index


Tickets ..... 104
**Permitted Carrieres ..... 114**
**Permitted Carriers**
Cancellation ..... 116
Discontinuance of Service ..... 115
Hazardous Materials ..... *See* "Hazardous Materials Permits"
Intercorporate Carriage ..... 115
Passenger Permits ..... 114
Penalties ..... 114
Property Permits ..... 115
Registration Permits ..... 114
Reinstatement ..... 116
**Practice and Procedure ..... 5**
Administrative Sessions ..... 5
Applications and Petitions ..... 6
Certificate or Permit, Amendment ..... 8
Certificate or Permit, Revocation ..... 8
Certificate or Permit, Suspension ..... 8
Complaints ..... 7
Consumers' Utility Counsel ..... 8
Inspection by Commission ..... 9
Opinions of Commissioners ..... 5
Parties of Record ..... 7
Public Hearings ..... 7
Publication of Commission Decisions ..... 5
Reconsideration ..... 7
Rehearing ..... 7
Rules, Amendment ..... 8
Rules, Failure to Observe ..... 8
Rules, Promulgation ..... 8
Rules, Repeal ..... 8
Rules, Suspension of ..... 8
**Railroad Companies ..... 136**
**Rates and Tariffs**
Changes ..... 110
Collective Rate-Making ..... 111
Method for Determining Rates or Fares ..... 109
Rate Schedule ..... 110
Tariffs ..... 111
**Safety and Hazardous Materials Rules ..... 18**
Georgia Forest Products Trucking Rules
Cargo Securement ..... 72
Commercial Driver's License (CDL) ..... 57
Construction ..... 55
Driver Qualification ..... 62
Driving of Motor Vehicles ..... 63
Drug and Alcohol Testing ..... 56
General Safety Regulations ..... 58
Hours of Service ..... 74
Inspection, Repair, and Maintenance ..... 75
Parts and Accessories ..... 64
Penalties ..... 55
Purpose and Applicability ..... 54
Hazardous Materials Safety ..... 42
Applicability ..... 42
Carriage by Highway ..... 50
Construction ..... 43
Definitions ..... 46
General Information ..... 46
General Packaging Requirements ..... 49
Georgia Intrastate Exceptions ..... 49
Hazard Communication ..... 48
Hazardous Materials Program Procedures ..... 44
Maintenance of Packaging ..... 53
Oil Spill Response Plans ..... 45
Penalties ..... 43
Specifications for Packaging ..... 51
Table of Hazardous Materials ..... 48
Limousine Safety Rules
Applicability ..... 76
Construction ..... 77
Driver Qualification ..... 79
Driving of Limousines ..... 80
Drug and Alcohol Prohibitions ..... 80
General ..... 78
Hours of Service ..... 87
Inspection, Repair and Maintenance ..... 88
Parts and Accessories ..... 82
Penalties ..... 77
Motor Carrier Safety ..... 19
"Log Book" ..... 38
Accident Reporting ..... 37
Applicability ..... 19
Commercial Driver's License (CDL) ..... 23
Construction ..... 20
Driver Qualifications ..... 30
Driving of Motor Vehicles ..... 32
Drug and Alcohol Testing ..... 22
General ..... 24
Hazardous Materials Driving and Parking Rules ..... 41
Hours of Service ..... 38
Inspection Repair and Maintenance ..... 39
Parts and Accessories ..... 33
Penalties ..... 20
Record of Duty Status ..... 38
Safety Operations Reviews ..... 89
**Single State Registration ..... *See* Rule 8-2.3**
SSRS Rules and Regulations ..... 124